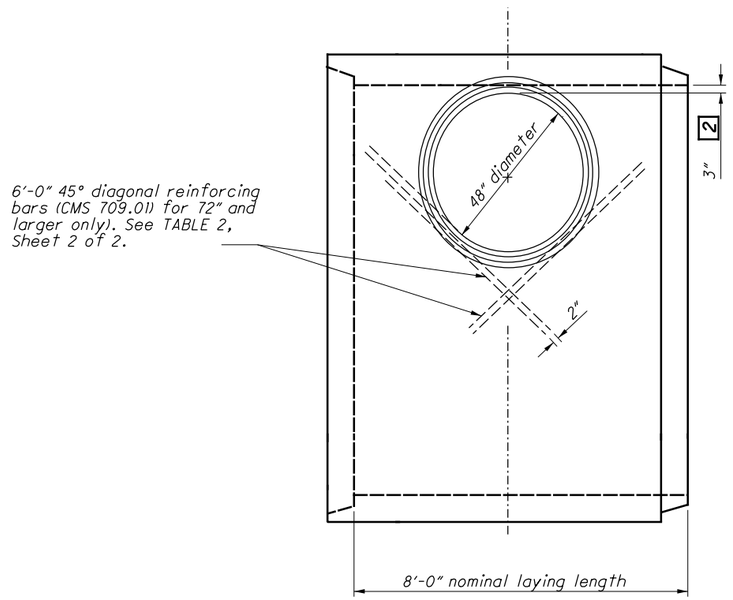

PLAN VIEW

LEGEND

1. If required by conduit specification.
2. On all sizes except 48".
3. One-half of the required number to each side of hole. (See Sht. 2/2.)

NOTES

GENERAL: Base pipe, 48" dia. through 144" dia., consists of the design shown and as required for the stronger of the two adjoining sections of conduit. Provide other manhole components above the base as detailed or specified on **SCD MH-1.2.**

APPLICATION: The Manhole No. 4 shown here may be used where no change in pipe size, direction or slope occurs, and no lateral sewers enter the manhole below the riser section.

BEDDING: Provide the same bedding as used under the adjoining conduits that meets the requirements of CMS 611.06.

STEPS: Provide steps that meet the requirements of **SCD MH-1.1.**

PAYMENT: Payment for Manhole No. 4 includes only the cost of the eccentric spur, additional pipe reinforcing, concrete backing, steps, riser sections, rings, castings and drop pipes. No deductions will be made in the lengths of the sanitary sewer conduit.

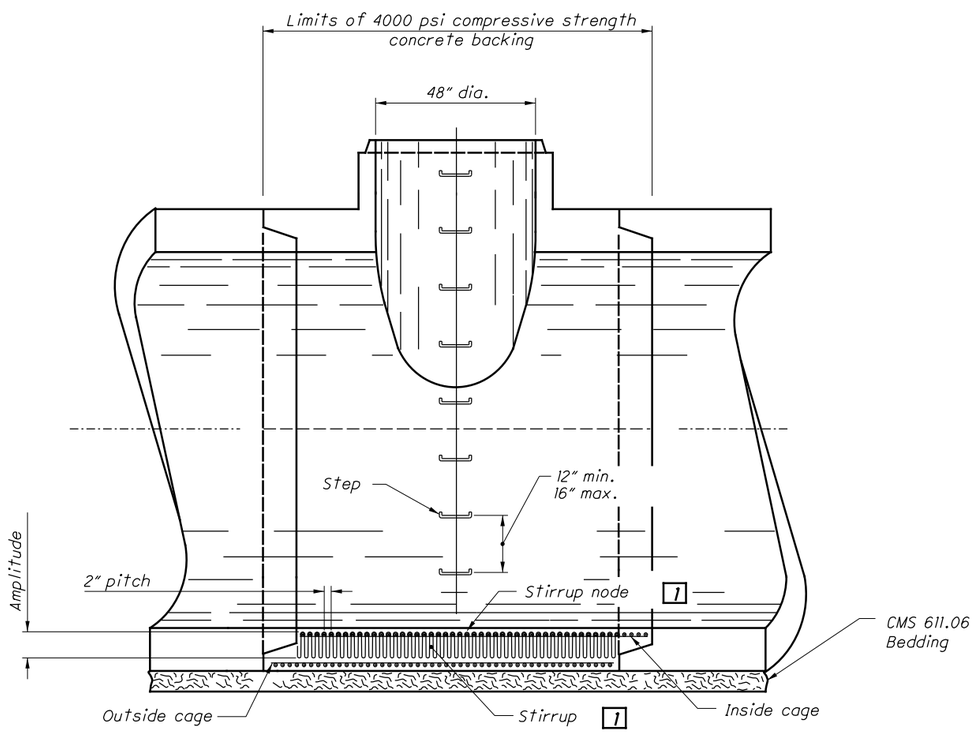

SECTION A-A

(Showing stirrup detail)

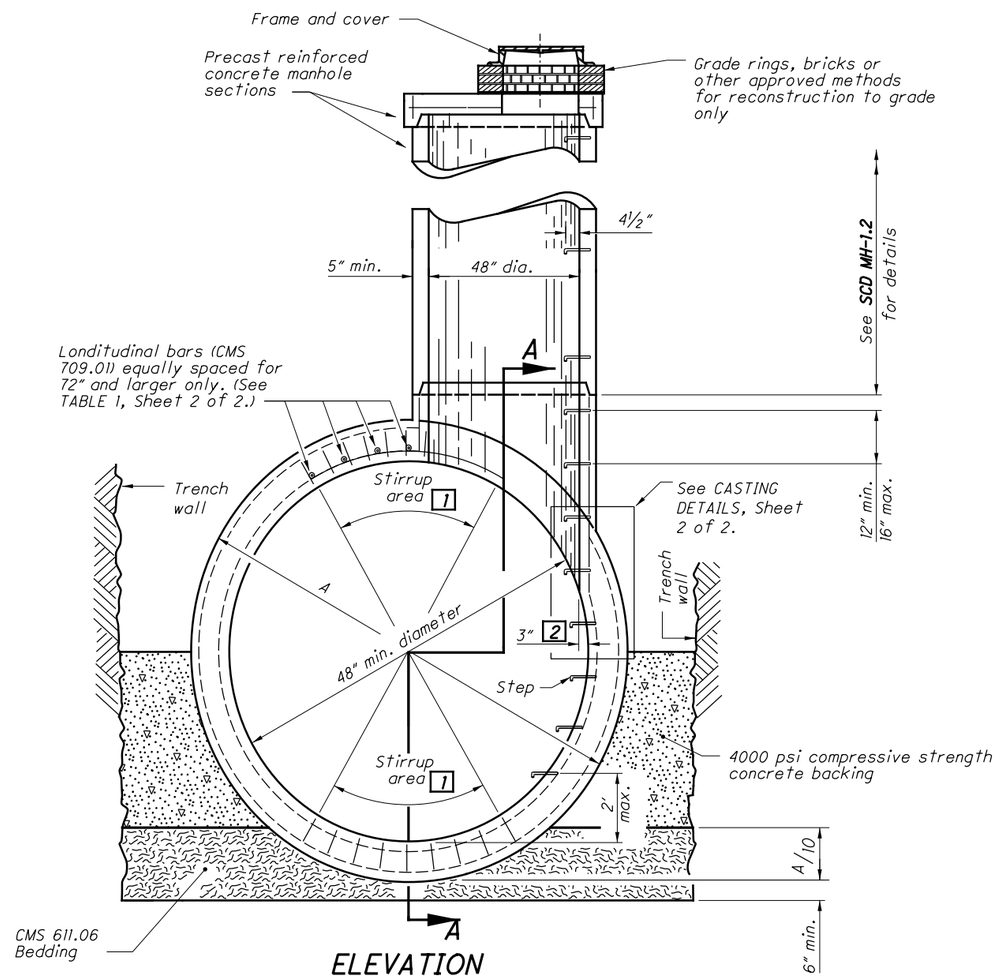

ELEVATION

STATE OF OHIO DEPARTMENT OF TRANSPORTATION HYDRAULIC ENGINEER
Jeffery E. Syar

REVISIONS
7-20-01
7-19-02
7-20-12
1-18-13

ROADWAY HYDRAULIC ENGINEER
M. Cozzoli

OFFICE OF HYDRAULICS ENGINEERING

STANDARD HYDRAULIC CONSTRUCTION DRAWING
MANHOLE No. 4

SCD NUMBER
MH-2.1

1 / 2

I:\ODOTcadd\Standards\ODOT\Sheets\SCD\Hydraulics\MH-2.1_2013-01-18.dgn Sheet 1 1/27/2017 10:31:07 AM jyoung6

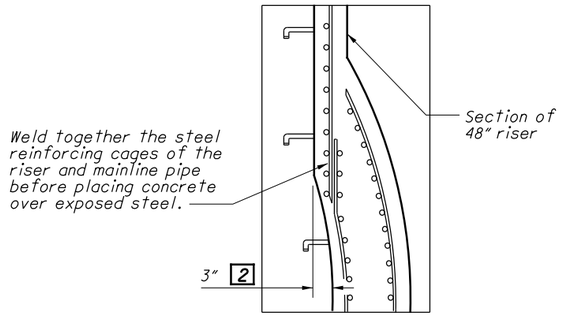

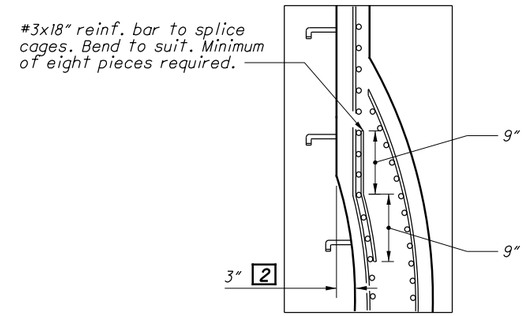

LEGEND

1 If required by conduit specification. (See Sht. 1/2.)

2 On all sizes except 48".

3 One-half of the required number to each side of hole.

INTEGRALLY CAST

See ELEVATION Detail, Sheet 1 of 2.

CASTING DETAILS

See ELEVATION Detail, Sheet 1 of 2.

TABLE 1 (English)

D-LOAD	1000			1350			2000			3000		
Dia.	Longitudinal Bars			Longitudinal Bars			Longitudinal Bars			Longitudinal Bars		
	Size	Length	No. Req'd	Size	Length	No. Req'd	Size	Length	No. Req'd	Size	Length	No. Req'd
72"	#5	7'-5"	4	#5	7'-5"	4	#5	7'-5"	4	#5	7'-5"	4
78"	#6	7'-5"	4	#6	7'-5"	4	#6	7'-5"	4	#6	7'-5"	4
84"	#6	7'-5"	4	#6	7'-5"	4	#6	7'-5"	4	#6	7'-5"	4
90"	#6	7'-5"	4	#6	7'-5"	4	#6	7'-5"	4	#6	7'-5"	4
96"	#6	7'-5"	4	#6	7'-5"	4	#6	7'-5"	4	#6	7'-5"	4
102"	#6	7'-5"	4	#6	7'-5"	4	#6	7'-5"	4	#6	7'-5"	4
108"	#6	7'-5"	4	#6	7'-5"	4	#6	7'-5"	4	#6	7'-5"	4
114"	#5	7'-5"	6	#5	7'-5"	6	#5	7'-5"	6	#5	7'-5"	6
120"	#7	7'-5"	4	#7	7'-5"	4	#7	7'-5"	4	#7	7'-5"	4
126"	#7	7'-5"	4	#7	7'-5"	4	#7	7'-5"	4	#7	7'-5"	4
132"	#7	7'-5"	4	#7	7'-5"	4	#7	7'-5"	4	#7	7'-5"	4
144"	#7	7'-5"	4	#7	7'-5"	4	#7	7'-5"	4	#7	7'-5"	4

See PLAN VIEW Detail, Sheet 1 of 2.

TABLE 2 (English)

D-LOAD	1000		1350		2000		3000	
Dia.	Diag. Bars		Diag. Bars		Diag. Bars		Diag. Bars	
	Size	No. 3 Req'd	Size	No. 3 Req'd	Size	No. 3 Req'd	Size	No. 3 Req'd
72"	#5	2	#5	2	#5	4	#5	4
78"	#5	2	#5	2	#5	4	#6	4
84"	#5	2	#4	4	#5	4	#6	4
90"	#5	2	#4	4	#5	4	#6	4
96"	#5	2	#4	4	#5	4	#7	4
102"	#4	4	#5	4	#6	4	#7	4
108"	#4	4	#5	4	#6	4	#7	4
114"	#4	4	#5	4	#6	4	#7	4
120"	#5	4	#5	4	#6	4	#6	6
126"	#5	4	#5	4	#6	4	#6	6
132"	#5	4	#5	4	#7	4	#7	6
144"	#5	4	#6	4	#7	4	#7	6

STATE OF OHIO DEPARTMENT OF TRANSPORTATION HYDRAULIC ENGINEER
Jeffery E. Syar

REVISIONS
7-20-01
7-19-02
7-20-12
1-18-13

ROADWAY HYDRAULIC ENGINEER
M. Cozzoli

OFFICE OF HYDRAULICS ENGINEERING

STANDARD HYDRAULIC CONSTRUCTION DRAWING
MANHOLE No. 4

SCD NUMBER
MH-2.1

I:\ODOTcadd\Standards\ODOT\Sheets\SCD\Hydraulics\MH-2.1_2013-01-18.dgn Sheet 2 1/27/2017 10:31:07 AM jyoung6