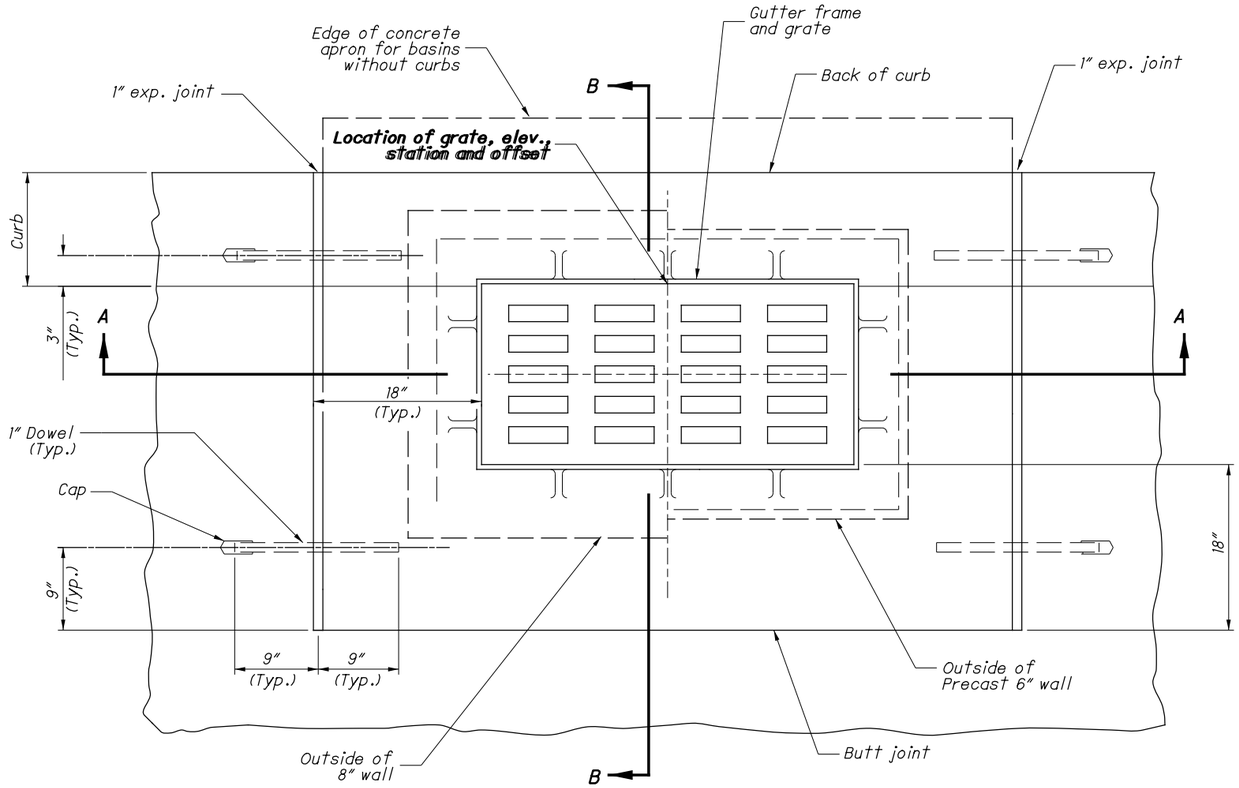

See Sht. 2/2 for Sections

PLAN OF CATCH BASINS AND PAVEMENT JOINTS

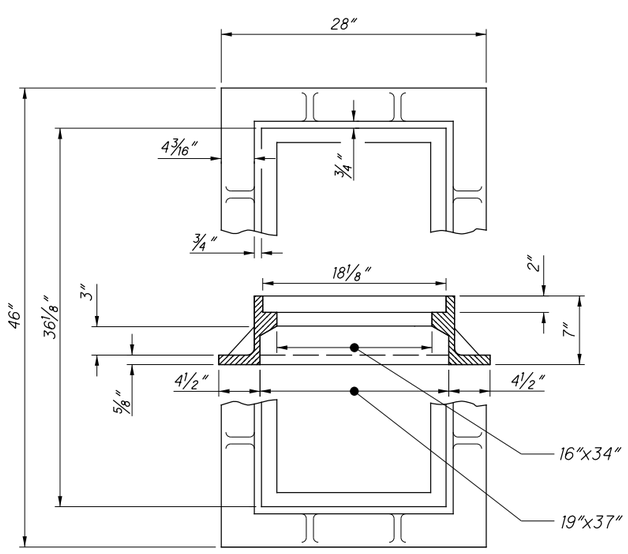

FRAME

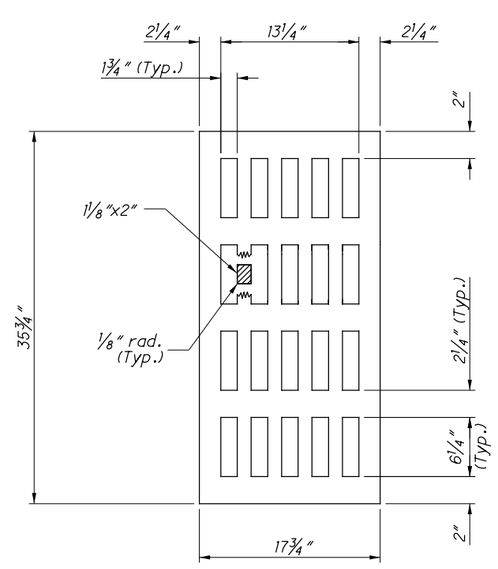

GRATE

NOTES

GRATE AND FRAME: Provide a design essentially the same and equally as strong as the one shown (see construction information table), or meet the requirements of CMS 711.14. Provide grate openings and dimensions as shown here unless otherwise shown in the plans.

Cast the following text into the top of the grate:

"DUMP NO WASTE" and **"DRAINS TO WATERWAY"**

Print text in bold, capital letters at least ½" high. "WATERWAY" may be substituted with "STREAM", "RIVER", "LAKE", etc. Actual placement and logo may vary per manufacturer.

BEARING AREAS: Fit and finish frame and grate to provide a firm and even seat for all portions of the grate in the frame. No projections are permitted on bearing areas of either casting, and the grate must seat in its frame without rocking. Fit, match and mark frame and grate before delivery to the project.

WALLS: Construct brick or cast-in-place walls with a nominal thickness of 8". Provide precast walls at least 6" thick with sufficient reinforcing to permit shipping and handling without damage.

CONCRETE: Use 4000 psi for cast-in-place concrete. Meet the requirements of CMS 706.13 for precast concrete and mark with the catch basin number. Reduce the wall thickness from the outside.

MINIMUM DEPTH: The minimum depth is the outside diameter (O.D.) of the outlet pipe plus 15".

OPENINGS: Ensure pipe openings are the O.D. of the pipe being supplied plus 2" when fabricated or field cut. Fill any voids per C&MS 611.

DOWELS: Furnish four 1"x18" dowels for pavement and curb. See **SCD BP-2.2** for dowel detail.

BLOCKOUT APRONS: Use 4000 psi compressive strength concrete. Cost of apron is not included in catch basin price when located in PCC pavement, and no deduction in normal pavement quantities is made because of blockout. When adjacent paving is asphalt, omit the dowels, and the cost of the concrete apron is included in the catch basin bid price. Cost of curb, if any, is included in CMS 609. For basins without curb, the grate elevation is 1" below the normal pavement slope measured at the center of the grate.

PAYMENT: All materials and labor, including excavation and backfilling, are paid for under **Item 611 - Catch Basin, No. 6.**

CONSTRUCTION INFORMATION
Minimum weight of grate, 210 lbs.
Minimum weight of frame, 265 lbs.

STATE OF OHIO DEPARTMENT OF TRANSPORTATION HYDRAULIC ENGINEER
Jeffery E. Syar

REVISIONS
7-20-01
7-19-02
7-15-05
7-20-12
1-18-13
1-15-16

ROADWAY HYDRAULIC ENGINEER
M. Cozzoli

OFFICE OF HYDRAULICS ENGINEERING

STANDARD HYDRAULIC CONSTRUCTION DRAWING
CATCH BASIN No. 6

SCD NUMBER
CB-2.3

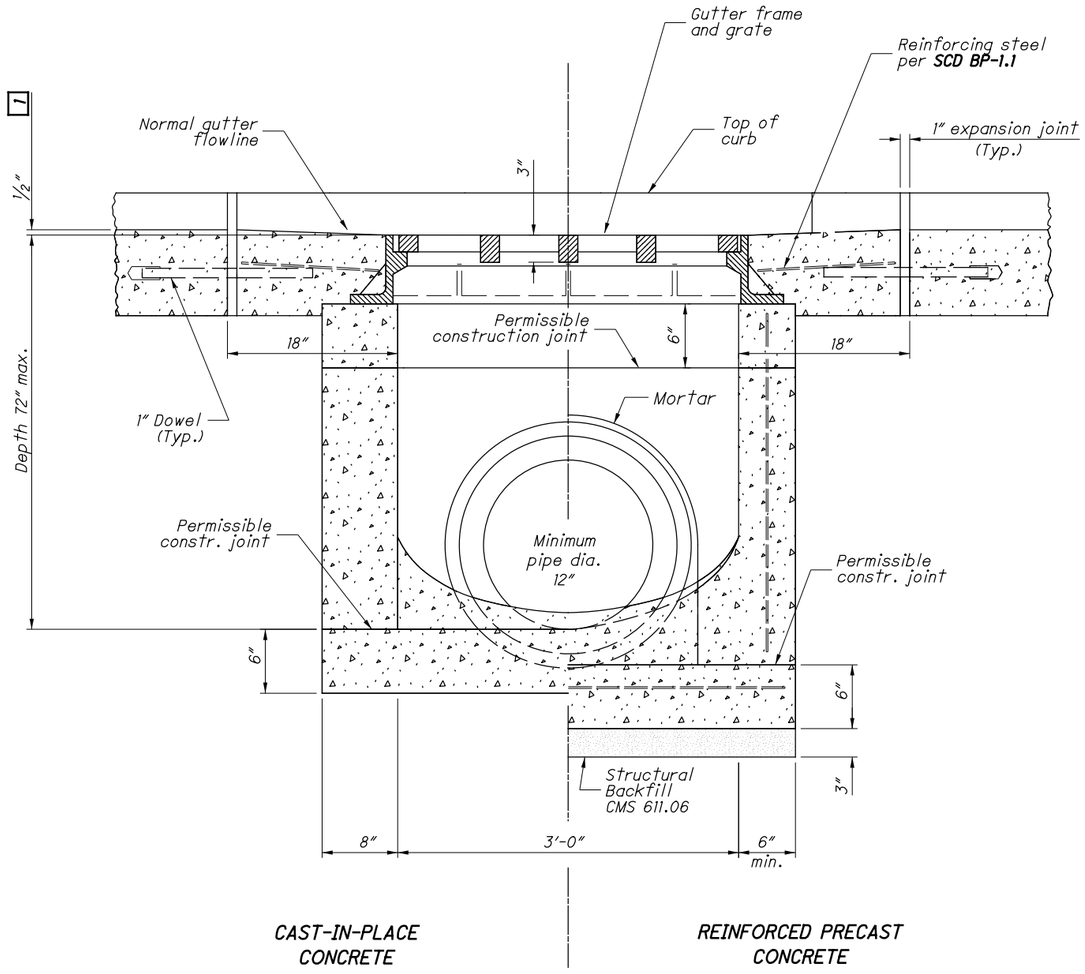

SECTION A-A

(See Sht. 1/2.)

1 Unless otherwise shown on plans

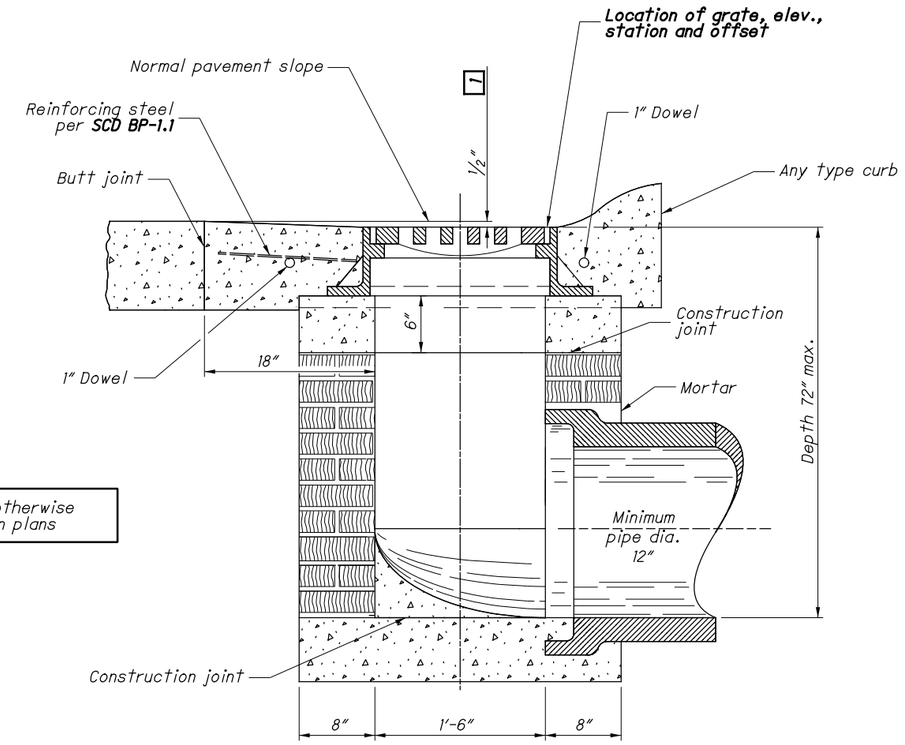

SHOWN WITH BRICK WALLS

SECTION B-B

(See Sht. 1/2.)

CATCH BASIN No. 6

STATE OF OHIO DEPARTMENT OF TRANSPORTATION HYDRAULIC ENGINEER
Jeffery E. Syar

REVISIONS
7-20-01
7-19-02
7-15-05
7-20-12
1-18-13
1-15-16

ROADWAY HYDRAULIC ENGINEER
M. Cozzoli

OFFICE OF HYDRAULICS ENGINEERING

STANDARD HYDRAULIC CONSTRUCTION DRAWING
CATCH BASIN No. 6

SCD NUMBER
CB-2.3