CONSTRUCTION METHODS

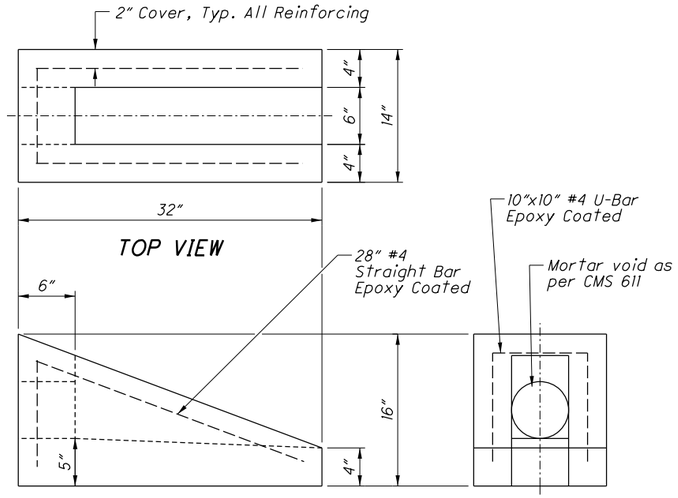

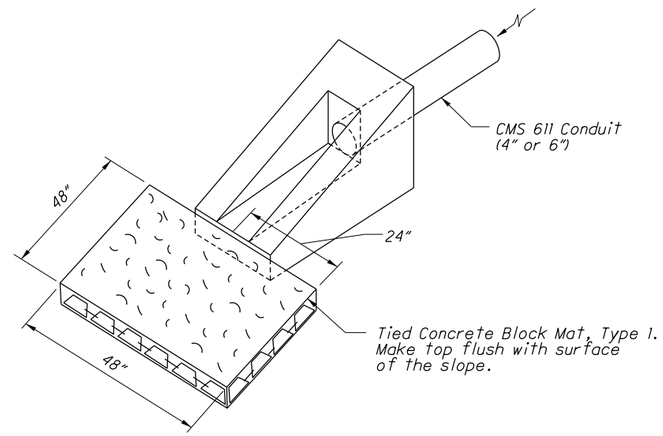

PRECAST REINFORCED CONCRETE OUTLET

NOTES

EROSION CONTROL PAD: Provide erosion control at the outlet of all farm drains except where they outlet into a drainage structure.

PAYMENT: Erosion control pads are included in the unit price bid for Item 611 - __ Inch Conduit, Type __ .

PRECAST REINFORCED CONCRETE OUTLET: Provide a concrete outlet that meets CMS 611 requirements.

PAYMENT: The precast reinforced concrete outlet are paid at the contract unit price bid for Item 611 - Precast Reinforced Concrete Outlet.

Tied Concrete Block Mat, Type 1 is paid at the contract unit price bid for Item 601 - Tied Concrete Block Mat, Type 1.

SPRING DRAIN: Aggregates, tarred paper, tarred burlap, or geotextile fabric backfill and necessary excavation for spring drains are included for payment in the unit price bid per Foot for Item 605 - Aggregate Drains for Springs.

PAYMENT: The pipe is included in the unit price bid per Foot for Item 605 - 6" Unclassified Pipe Underdrains for Springs.

MASONRY COLLARS: Provide a masonry collar where plans require that a pipe extension be joined to the end of an existing pipe with a butt joint. The cost is included in the unit price bid for the new conduit.

RIPRAP CUTOFF WALL: The cost of the cutoff wall is included in the unit price bid for Item 601, Type D - Construct a 6" Reinforced Concrete Slab.

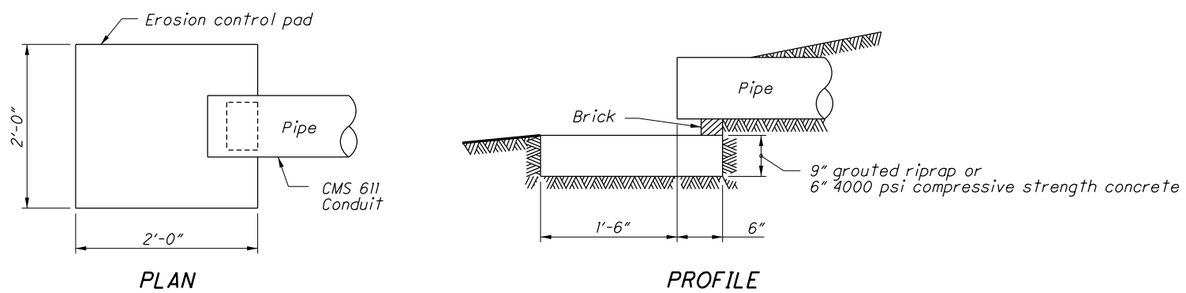

EROSION CONTROL PAD FOR OUTLET PIPE

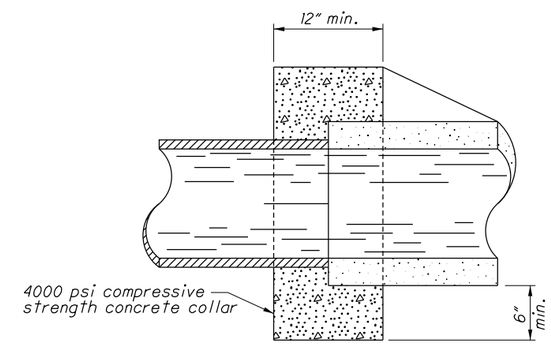

MASONRY COLLAR

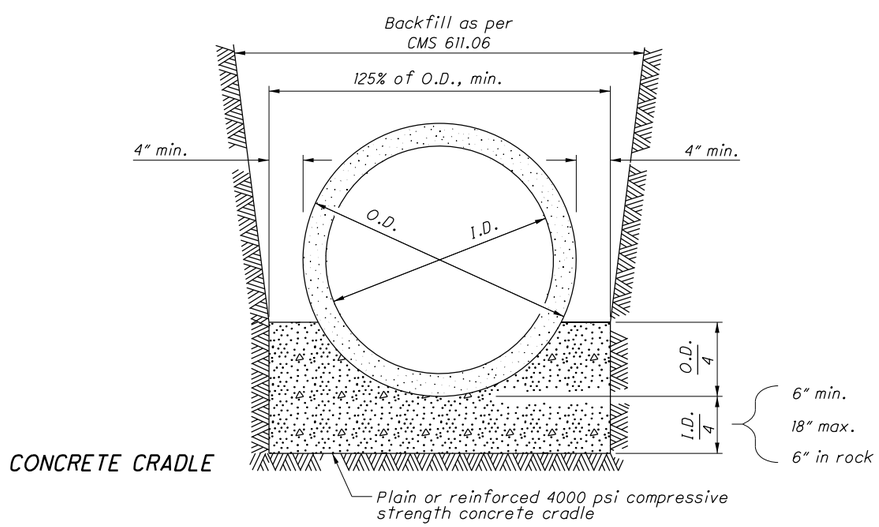

CONCRETE CRADLE

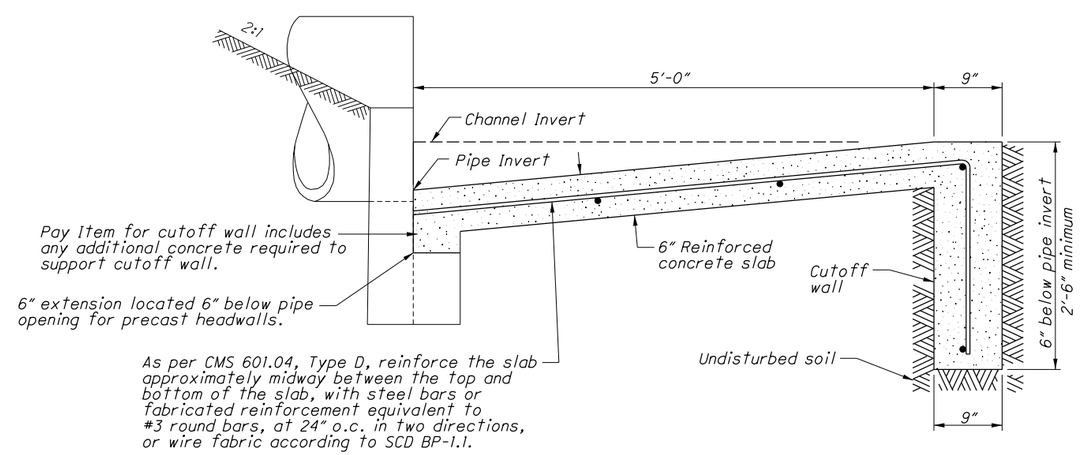

RIPRAP CUTOFF WALL

STATE OF OHIO DEPARTMENT OF TRANSPORTATION

STATE HYDRAULIC ENGINEER

REVISIONS
7-18-03
1-21-05
10-21-05
4-21-06
1-21-11
7-20-12
1-18-13
1-15-16
7-21-17

ROADWAY HYDRAULIC ENGINEER
Matt Cozzoli

OFFICE OF HYDRAULIC ENGINEERING

STANDARD HYDRAULIC CONSTRUCTION DRAWING

OUTLETS, DRAINS AND SEWERS

SCD NUMBER
DM-1.1

SPRING DRAIN DETAIL

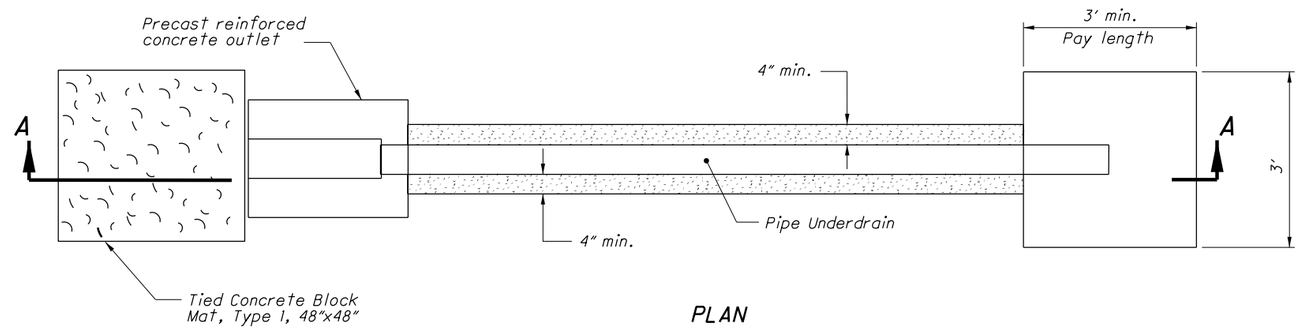

PLAN

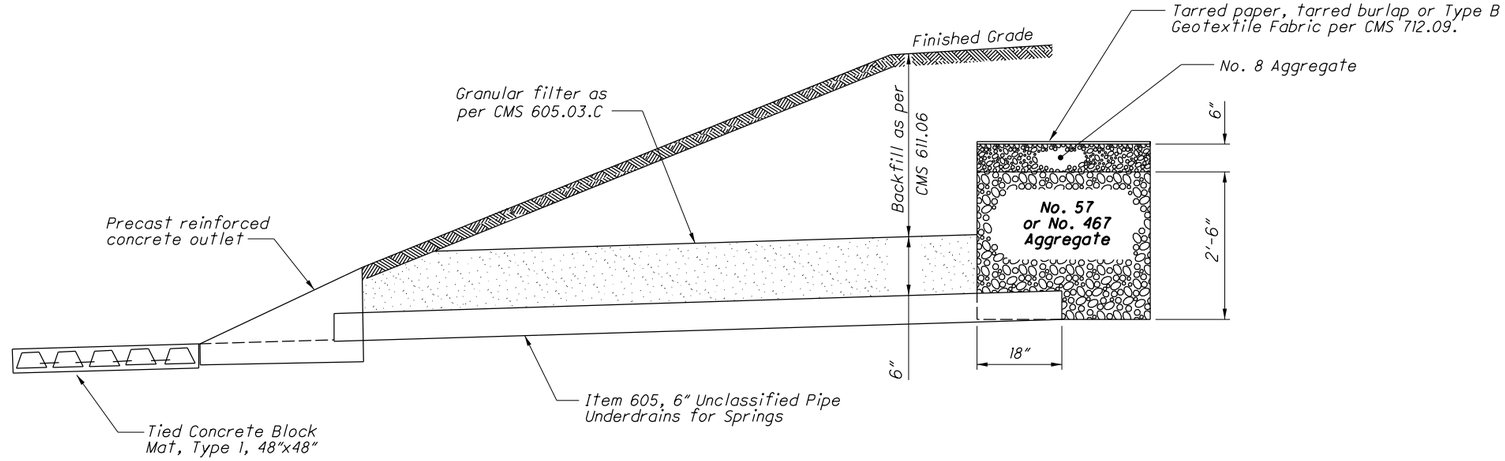

SECTION A-A

STATE OF OHIO DEPARTMENT OF TRANSPORTATION

STATE HYDRAULIC ENGINEER

REVISIONS
7-18-03
1-21-05
10-21-05
4-21-06
1-21-11
7-20-12
1-18-13
1-15-16
7-21-17

ROADWAY HYDRAULIC ENGINEER
Matt Cozzoli

OFFICE OF HYDRAULIC ENGINEERING

STANDARD HYDRAULIC CONSTRUCTION DRAWING

OUTLETS, DRAINS AND SEWERS

SCD NUMBER
DM-1.1