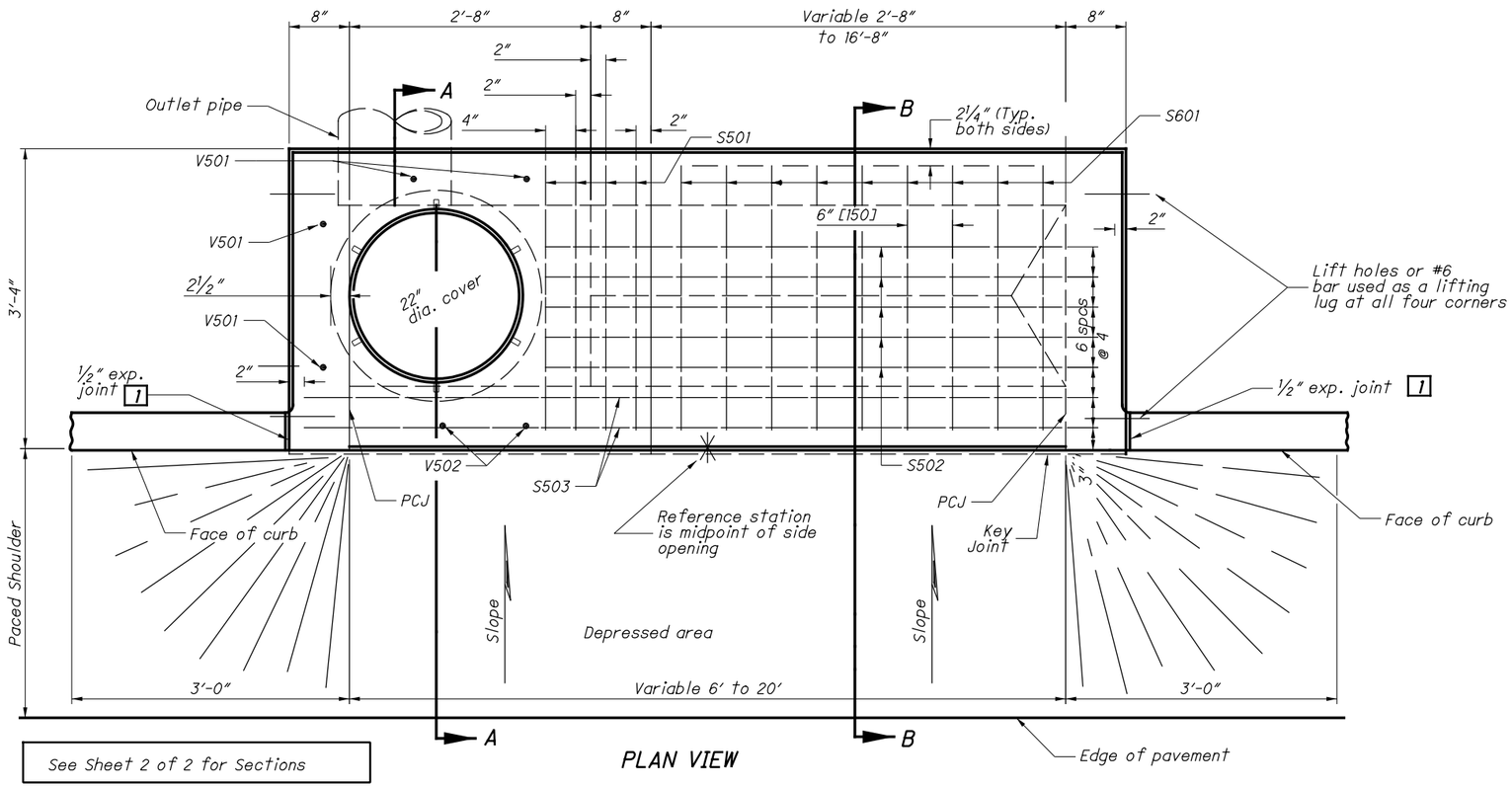

PLAN VIEW

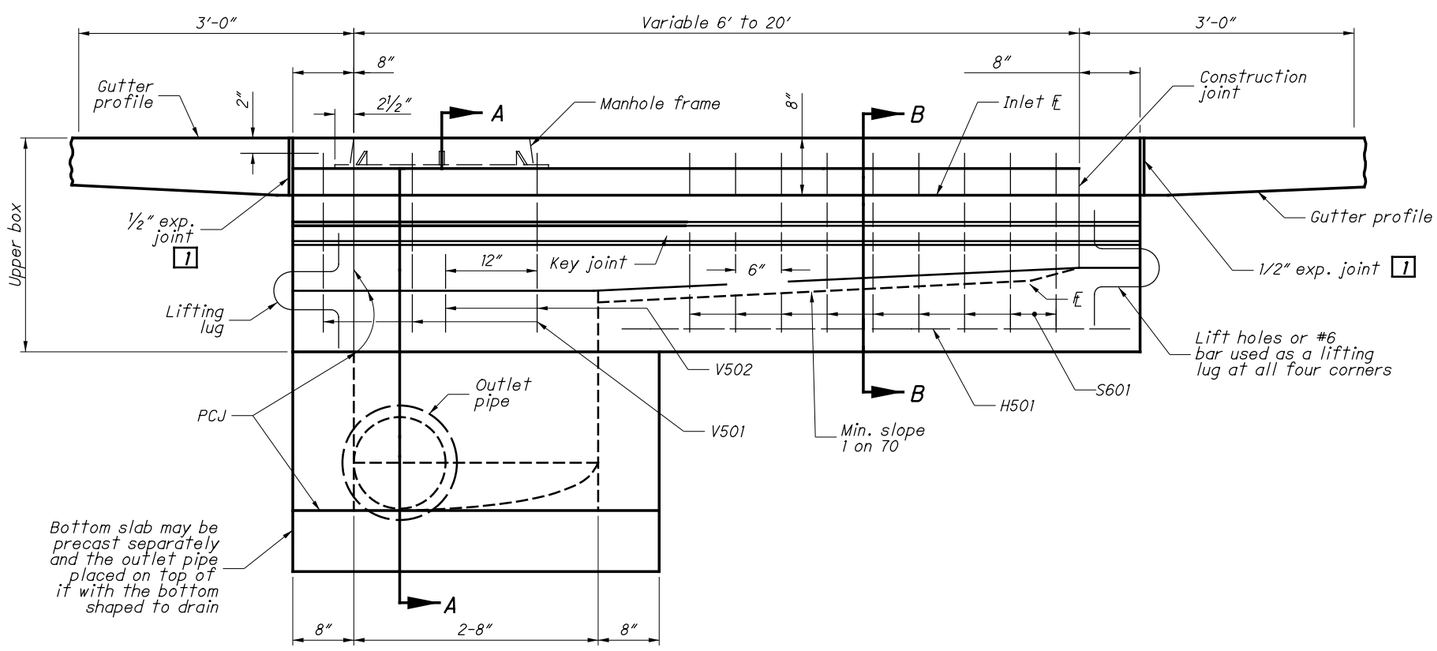

FRONT ELEVATION

PAVEMENT INLETS (6′ to 20′)

NOTES

CASTINGS: Provide a design essentially the same and equally as strong and heavy as those shown, or meet the requirements at CMS 711.14

Fit and finish the bearing areas of the frame and cover to provide a firm and even seat for the entire cover in the frame. Ensure there are no projections on the bearing areas of either casting and the cover seats in its frame without rocking.

Minimum weight of frame and cover: 195 lbs.

SUMP WALLS: Walls between the upper box and bottom slab may be brick, concrete block, cast-in-place or precast concrete construction. The minimum thickness of precast walls is 6″. Sufficiently reinforce precast walls to permit shipping and handling without damage.

CONCRETE: Provide 4000 psi compressive strength concrete when cast-in-place. Provide pre-cast concrete that meets the requirements of CMS 706.13. Mark the inlet number on the structure. Seal all exposed concrete surfaces of the inlet per item 512 when specified in the plans.

REINFORCING STEEL: Provide epoxy coated reinforcing steel in accordance with CMS 509.09.

QUANTITIES: Deduct the curb quantities within the limits of the inlet from the project quantities.

SIDE OPENING: Details shown for the right side of the inlet also apply to left side openings where needed for drainage of the opposite outside shoulder as shown in the plans. Locate the sump at the downgrade end of the inlet for both right and left side openings.

OPENINGS: Ensure pipe openings are the outside diameter of the pipe being supplied plus 2″ when fabricated or field cut. Fill any voids per C&MS 611.

UPPER BOX: May be precast, or cast-in-place. If precast, set it in a bed of mortar at the sump walls and in a bed of compacted sand at all other points. Provide reinforcing steel for precast upper boxes that is equivalent to the design shown. Construction joints other than those shown are permitted in the endwalls to facilitate the removal of precasting forms. The interior trough may have a flat bottom.

PCJ: Permissible Construction Joint

LEGEND

1 Provide a 1″ minimum expansion joint in concrete pavement or concrete shoulders.

2 In lieu of the depressed shoulder shown here, provide a concrete apron as shown on SCD I-1.1 when the inlet is placed at the edge of pavement.

STATE OF OHIO DEPARTMENT OF TRANSPORTATION HYDRAULIC ENGINEER
Jeffery E. Syar

REVISIONS
7-20-01
7-19-02
7-15-05
7-20-12
1-18-13
1-15-16

ROADWAY HYDRAULIC ENGINEER
M. Cozzoli

OFFICE OF HYDRAULICS ENGINEERING

STANDARD HYDRAULIC CONSTRUCTION DRAWING
PAVEMENT INLET No. 2A

SCD NUMBER
I-1.2

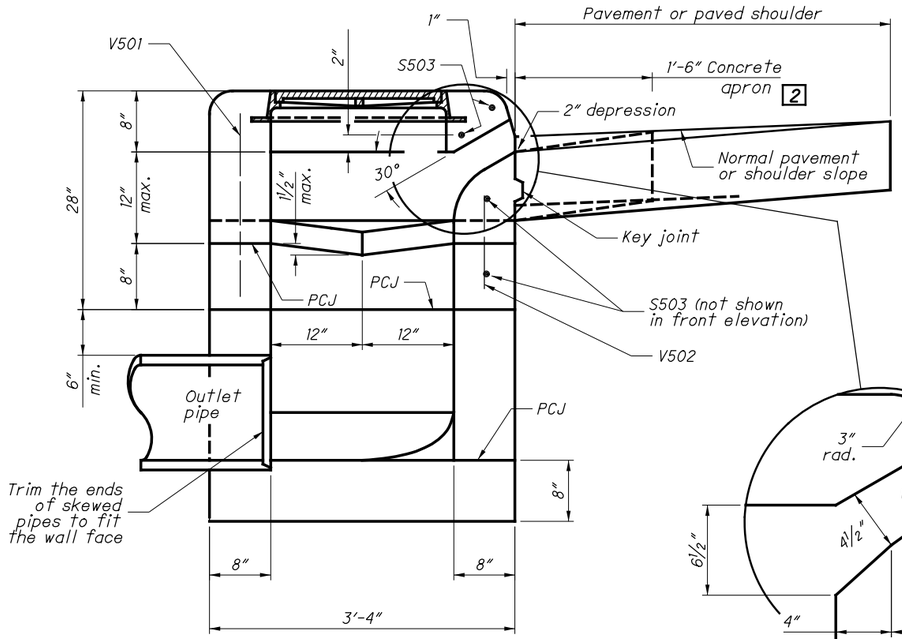

SECTION A-A
(See Sht. 1/2)

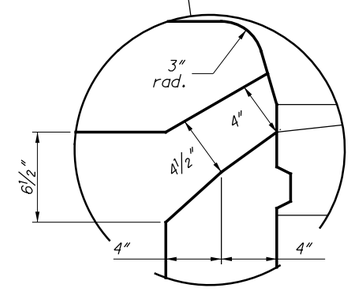

ALTERNATE OPENING

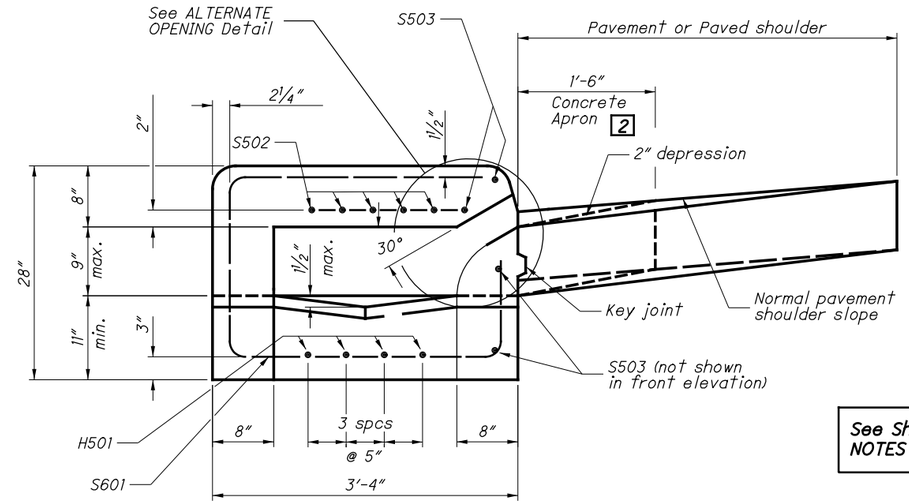

SECTION B-B
(See Sht. 1/2)

See Sheet 1 of 2 for NOTES and LEGEND

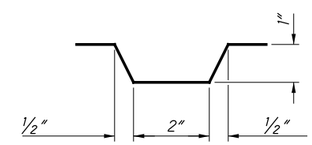

KEY JOINT

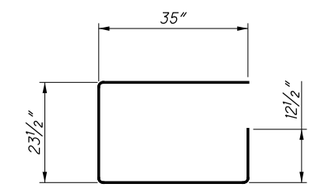

S601
#6 ROUND BAR
BENDING DIAGRAM

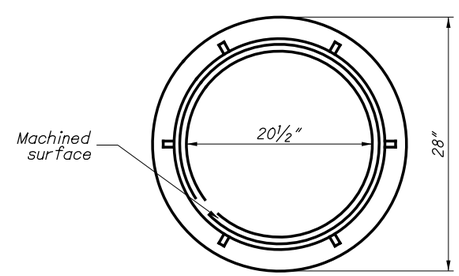

PLAN OF FRAME

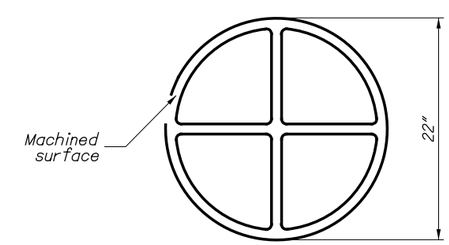

BOTTOM PLAN OF COVER

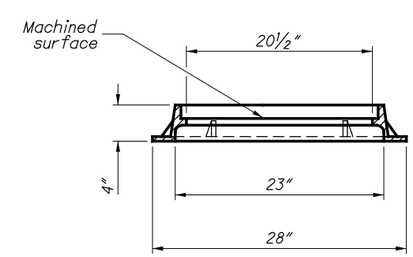

FRAME SECTION
MANHOLE FRAME

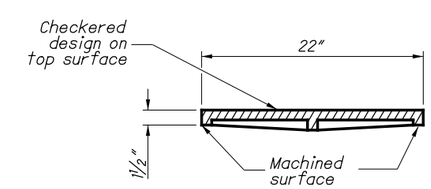

COVER SECTION
MANHOLE COVER

CONCRETE AND REINFORCING QUANTITIES (English)																
INLET LENGTH	CONCRETE	Reinforcing														Weight
		S601 #6 bar		S501 #5 bar		S502 #5 bar		S503 #5 bar		H501 #5 bar		V501 #5 bar		V502 #5 bar		
	(cu. yds.)	No.	Length	No.	Length	No.	Length	No.	Length	No.	Length	No.	Length	No.	Length	(lbs.)
6'	2.4	5	8'-10"	4	2'-11"	5	4'-4"	4	7'-0"	4	3'-8"	4	2'-0"	2	1'-0"	156
8'	2.8	9	8'-10"	4	2'-11"	5	6'-4"	4	9'-0"	4	5'-8"	4	2'-0"	2	1'-0"	236
10'	3.2	13	8'-10"	4	2'-11"	5	8'-4"	4	11'-0"	4	7'-8"	4	2'-0"	2	1'-0"	316
12'	3.6	17	8'-10"	4	2'-11"	5	10'-4"	4	13'-0"	4	9'-8"	4	2'-0"	2	1'-0"	397
14'	3.8	21	8'-10"	4	2'-11"	5	12'-4"	4	15'-0"	4	11'-8"	4	2'-0"	2	1'-0"	477
16'	4.4	25	8'-10"	4	2'-11"	5	14'-4"	4	17'-0"	4	13'-8"	4	2'-0"	2	1'-0"	557
18'	4.8	29	8'-10"	4	2'-11"	5	16'-4"	4	19'-0"	4	15'-8"	4	2'-0"	2	1'-0"	636
20'	5.2	33	8'-10"	4	2'-11"	5	18'-4"	4	21'-0"	4	17'-8"	4	2'-0"	2	1'-0"	717

Note: The above table of quantities is included with this drawing for estimating purposes only. Include the cost of furnishing and placing all concrete, reinforcing steel, casting, etc., in Item 611 for payment. All straight bars are #5.

STATE OF OHIO DEPARTMENT OF TRANSPORTATION HYDRAULIC ENGINEER
Jeffery E. Syar

REVISIONS
7-20-01
7-19-02
7-15-05
7-20-12
1-18-13
1-15-16

ROADWAY HYDRAULIC ENGINEER
M. Cozzoli

OFFICE OF HYDRAULICS ENGINEERING

STANDARD HYDRAULIC CONSTRUCTION DRAWING
PAVEMENT INLET No. 2A

SCD NUMBER
I-1.2