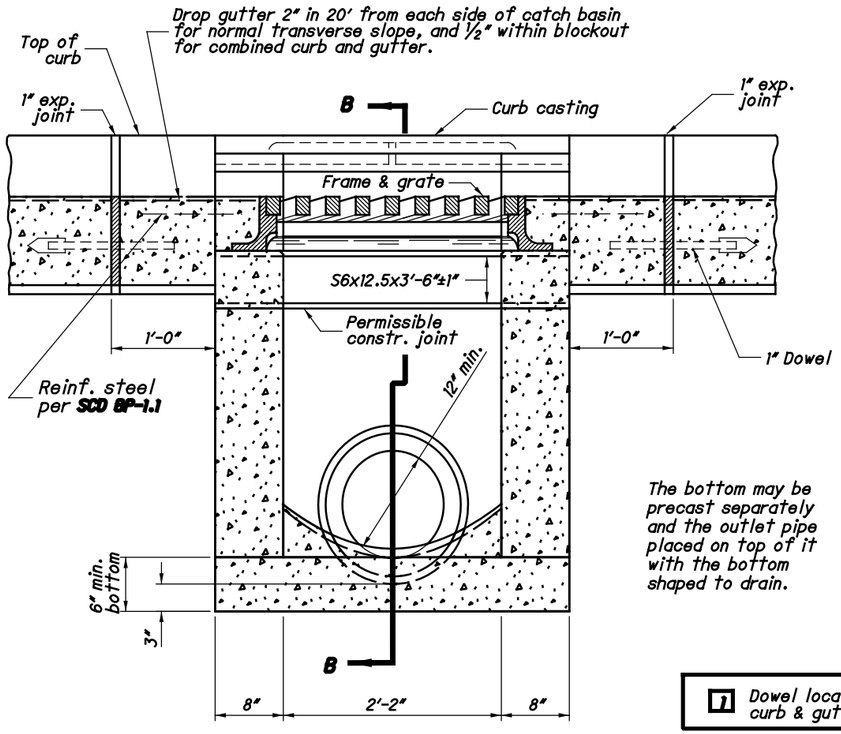

The bottom may be precast separately and the outlet pipe placed on top of it with the bottom shaped to drain.

1 Dowel location for curb & gutter

SECTION A-A

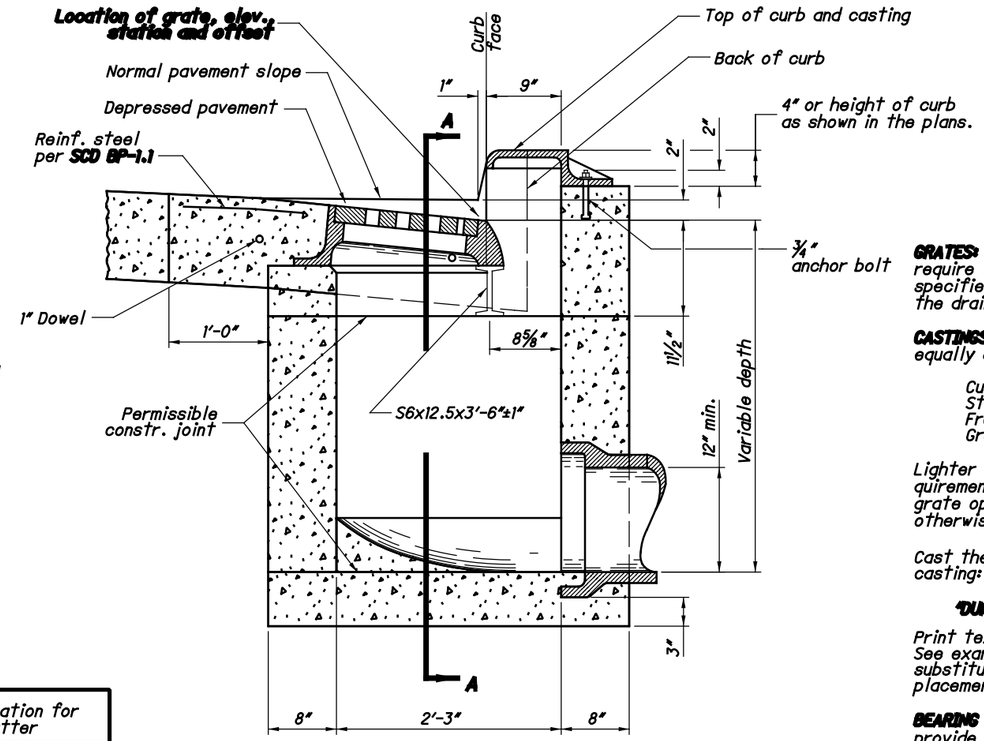

SECTION B-B WITH CURB (2" DEPRESSION)

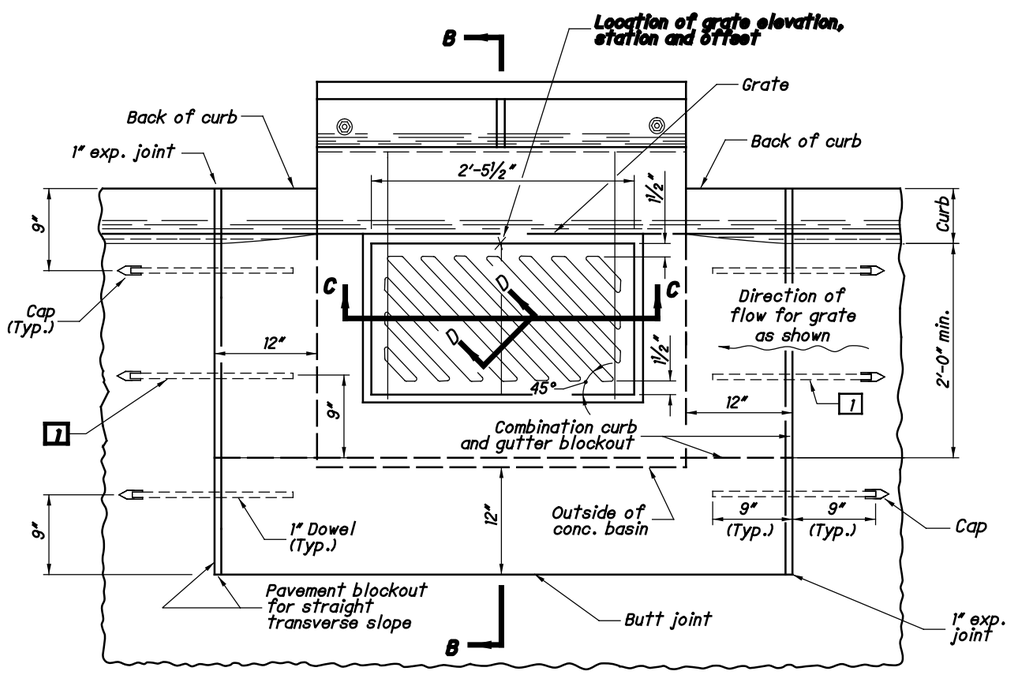

PLAN OF CATCH BASIN AND PAVEMENT JOINTS

(For SECTIONS C-C and D-D, see Sht. 2/2)

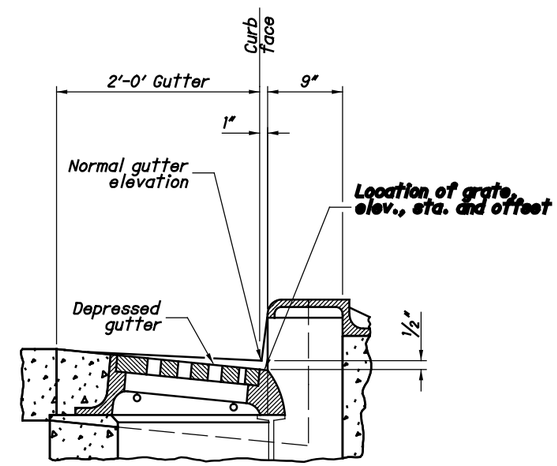

SECTION B-B WITH CURB & GUTTER (½" DEPRESSION)

NOTES

GRATES: Provide Grate "V" unless the plans specifically require the diagonal grate. If the diagonal grate is specified, place it so that the diagonal bars direct the drainage toward the curb.

CASTINGS: Provide a design essentially the same and equally as strong as the one shown. Minimum weight:

Curb Casting . . . . . 170 lbs.
Standard Grate . . . . 127 lbs.
Frame . . . . . 320 lbs.
Grate "V" . . . . . 105 lbs.

Lighter weight frames and grates that meet the requirements of CMS 711.14 may also be provided. Provide grate openings and dimensions as shown here unless otherwise shown in the plans.

Cast the following text into the top of the curb casting:

"DUMP NO WASTE" and **"DRAINS TO WATERWAY"**

Print text in bold, capital letters at least ¾" high. See example on Plan & Section. "WATERWAY" may be substituted with "STREAM", "RIVER", "LAKE", etc. Actual placement and logo may vary per manufacturer.

BEARING AREAS: Fit and finish the frame and grate to provide a firm and even seat. No projections are permitted on bearing areas, and the grate must seat in its frame without rocking.

WALLS: When used in place of concrete, construct brick side walls with 8" nominal thickness.

PRECAST CONSTRUCTION: Permitted, except for the apron. Meet CMS 706.13 concrete requirements. Provide precast walls at least 6" thick with sufficient reinforcing to permit shipping and placement without damage. Reduce the wall thickness from the outside.

MINIMUM DEPTH: The minimum depth is per the cover requirements for that pipe type.

OPENINGS: Ensure pipe openings are the O.D. of the pipe being supplied plus 2" when fabricated or field cut. Fill any voids per C&MS 611.

DOWELS: Furnish four 1"x18" dowels for concrete pavement or gutter blockout. See **SCD BP-2.2** for dowel details.

BLOCKOUT: Pave blockouts with 4000 psi compressive strength concrete in PCC pavement or gutter. Blockouts are paid for as part of the pavement or gutter with no deduction in pavement, curb or gutter quantities because of the castings. Cast a 4000 psi compressive strength concrete apron, the size of the 2'-0" gutter blockout, in place in asphalt pavement (no dowels required) with the cost included in the catch basin bid price. Provide the 1" expansion joint in the curb for all curb types with no deduction made in curb quantities.

PAYMENT: All materials and labor, including excavation and backfilling, are paid for under **Item 611 - Catch Basin, No. 3A.**

CATCH BASIN No. 3A

STATE OF OHIO DEPARTMENT OF TRANSPORTATION HYDRAULIC ENGINEER
Jeffery E. Syar

REVISIONS
7-15-05
7-20-12
1-18-13
1-17-14
1-15-16
7-20-18
1-15-21

ROADWAY HYDRAULIC ENGINEER
M. Cozzoli

OFFICE OF HYDRAULICS ENGINEERING

STANDARD HYDRAULIC CONSTRUCTION DRAWING
CATCH BASIN No. 3A

SCD NUMBER
CB-2.2

I:\hy\Standard Drawings\January 2021 Update\CB-2.2_2021-01.dgn 11/10/2020 2:59:22 PM kbrandon

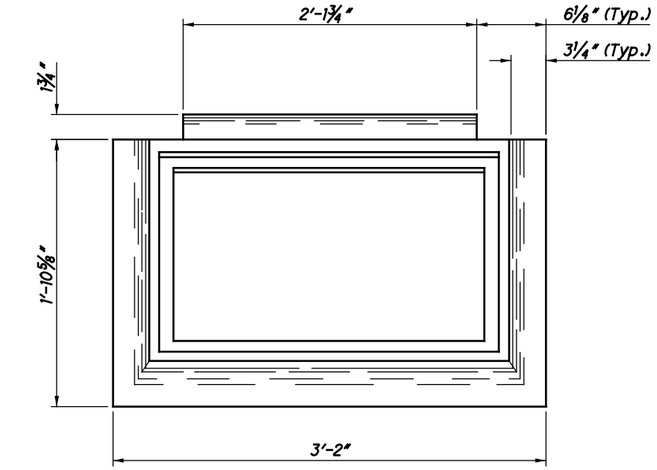

PLAN

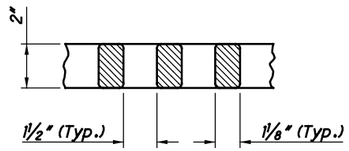

SECTION D-D
(See Sht. 1/2.)

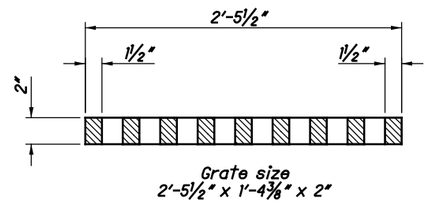

SECTION C-C
DIAGONAL GRATE
(See Sht. 1/2)

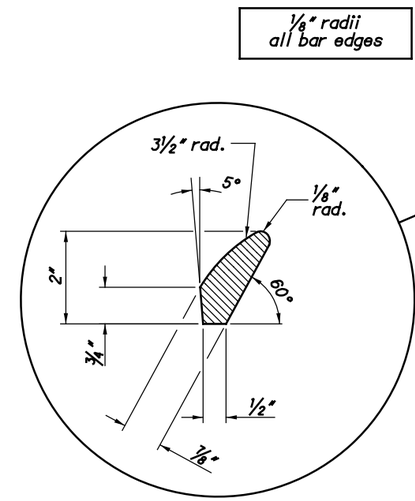

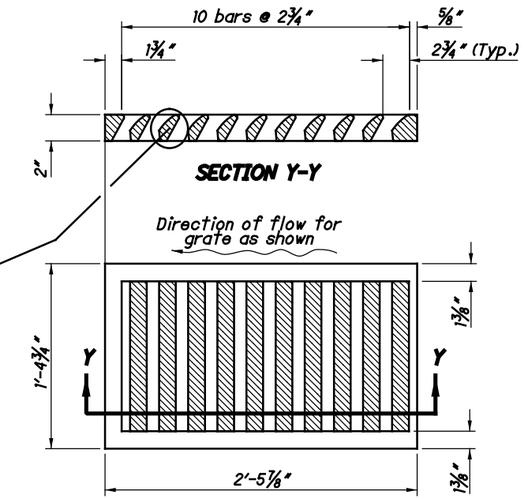

SECTION Y-Y

PLAN
GRATE "V"

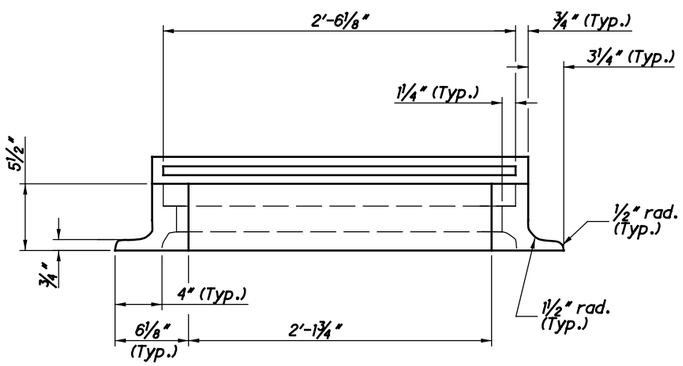

BACK VIEW

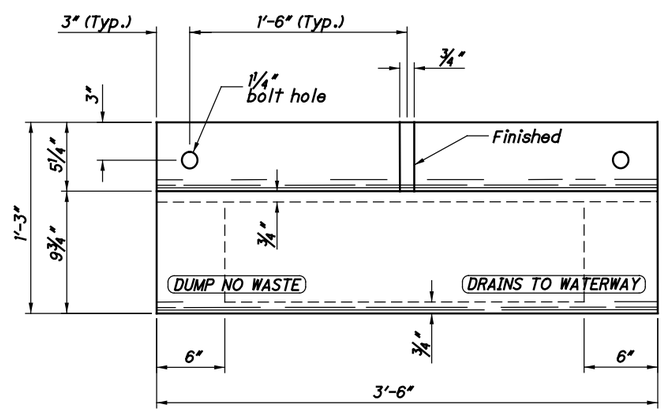

PLAN

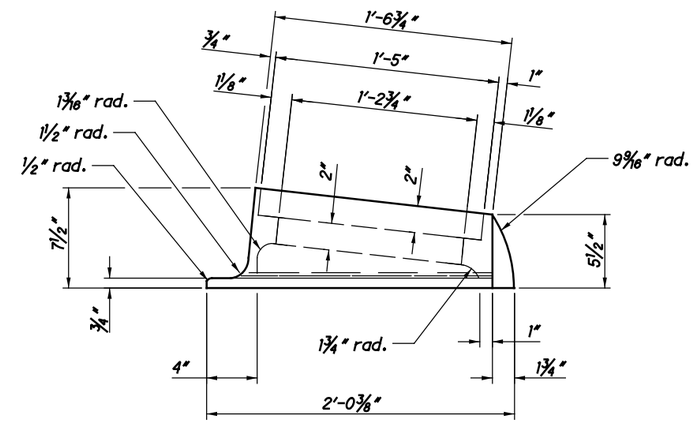

END VIEW FRAME

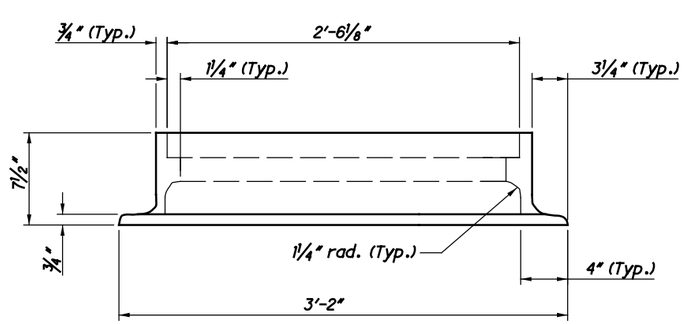

FRAME
FRONT VIEW

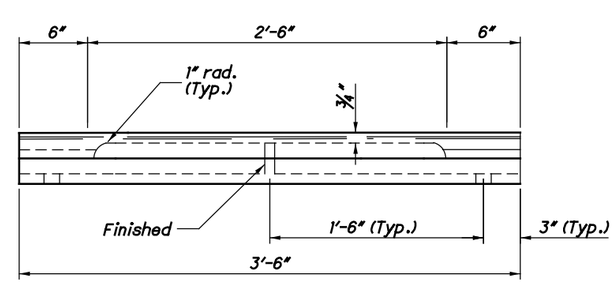

FRONT VIEW
CURB CASTING

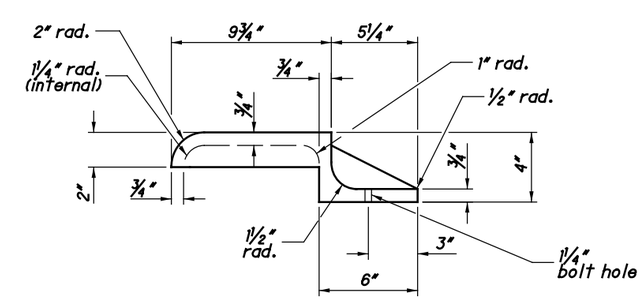

END VIEW
CURB CASTING

STATE OF OHIO DEPARTMENT OF TRANSPORTATION HYDRAULIC ENGINEER
Jeffery E. Syar

REVISIONS
7-15-05
7-20-12
1-18-13
1-17-14
1-15-16
7-20-18
1-15-21

ROADWAY HYDRAULIC ENGINEER
M. Cozzoli

OFFICE OF HYDRAULICS ENGINEERING

STANDARD HYDRAULIC CONSTRUCTION DRAWING
CATCH BASIN No. 3A

SCD NUMBER
CB-2.2

I:\hy\Standard Drawings\January 2021 Update\CB-2.2_2021-01.dgn 11/10/2020 3:00:42 PM kbrandon