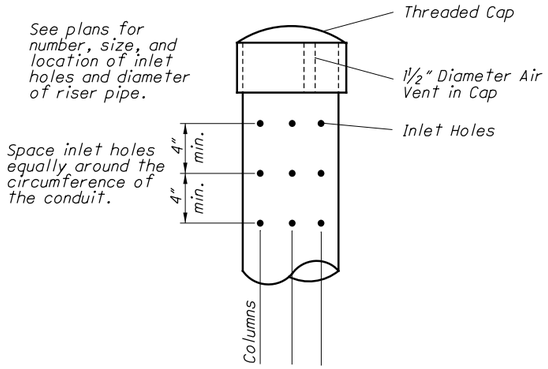

PERFORATED RISER
NOT TO SCALE

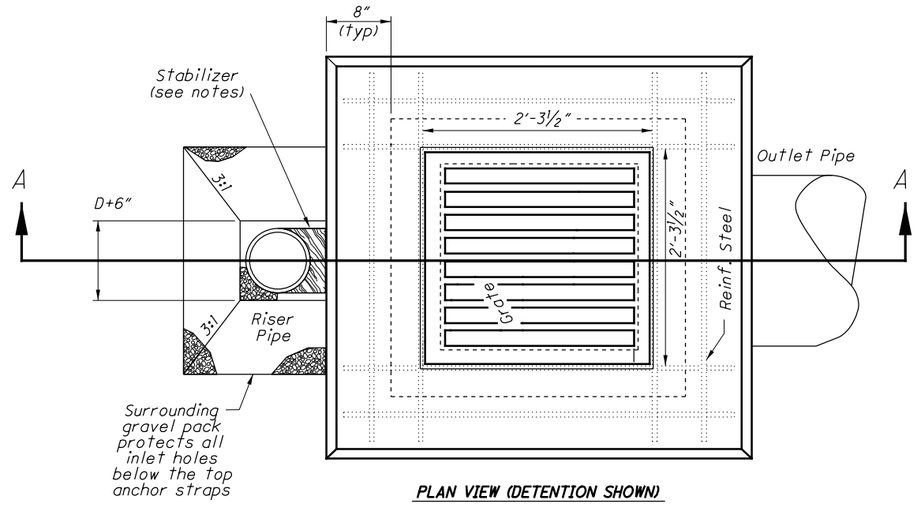

PLAN VIEW (DETENTION SHOWN)
NOT TO SCALE

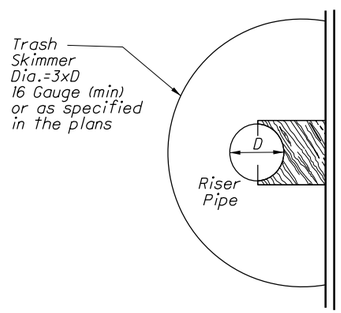

PLAN VIEW (RETENTION SHOWN)
NOT TO SCALE

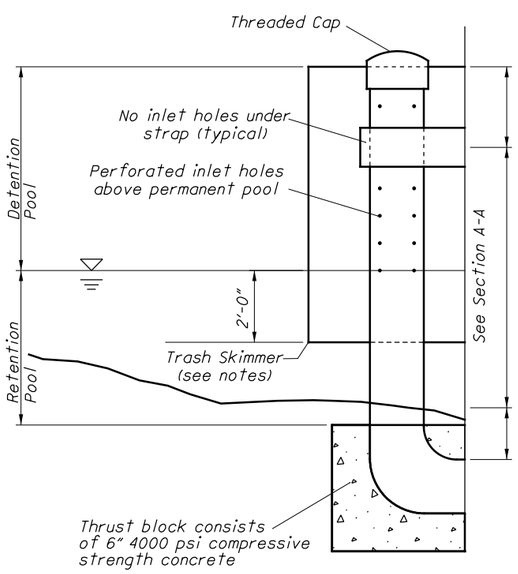

RETENTION RISER PIPE
NOT TO SCALE

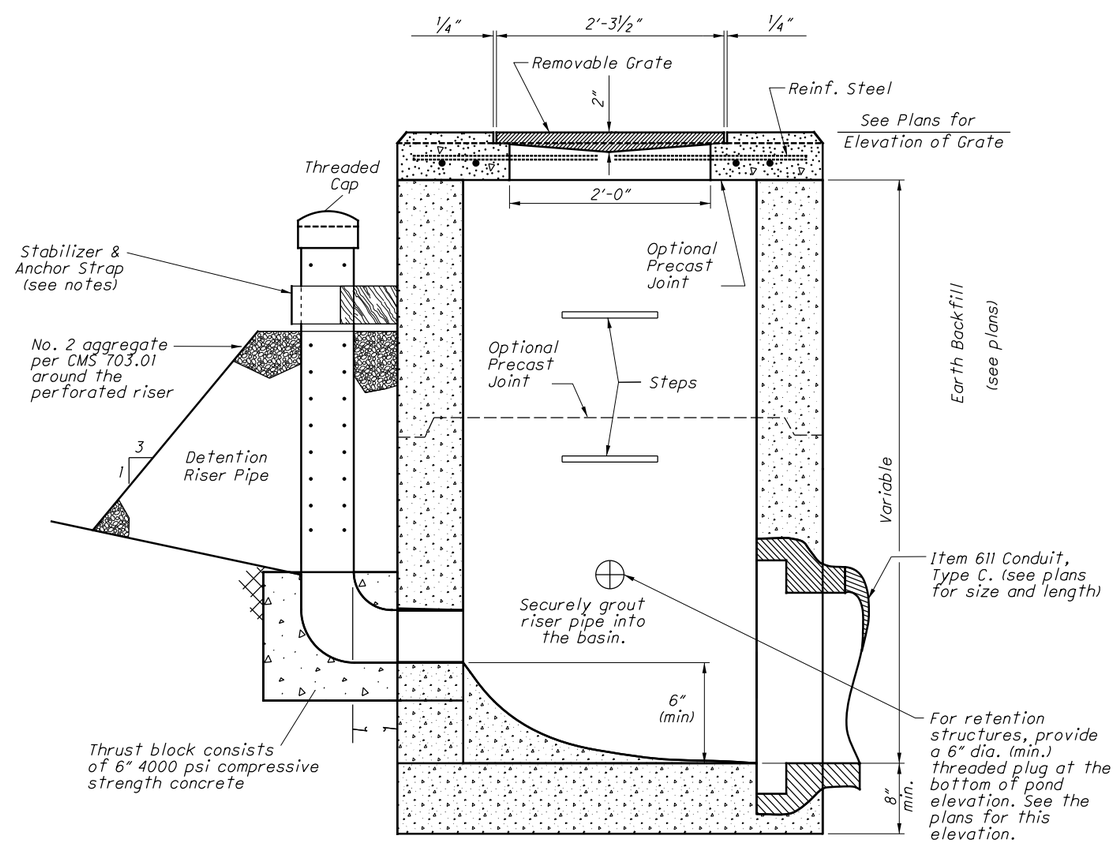

SECTION A-A (DETENTION SHOWN)
NOT TO SCALE

NOTES

LOCATION AND ELEVATION: When given on the plans, the location and the elevation are at the top center of the grate. Place the orifice holes at the elevations as shown on the plans.

BASIN MATERIALS: Provide basin dimensions, materials, and grate per CB-1.2, except as detailed here. Do not use side inlet windows.

Meet **CMS 203.02 H, NATURAL GRANULAR MATERIALS** and specified gradations for all aggregate shown.

RISER PIPE: Use schedule 40 Polyvinyl Chloride Conduit with perforations only as detailed in the plans.

TRASH SKIMMER: Use trash skimmer screens to protect the perforated riser. It must extend from the top of the riser to 2' below the permanent pool level and be open at the top and bottom. The radius of the trash skimmer is 3 times the diameter of the riser pipe or as shown on the plans. Provide stainless steel or galvanized steel trash skimmer per CMS 711.02. Maximum perforation size is 2 inches. Securely fasten trash skimmer to the basin using hardware galvanized per CMS 711.02.

STABILIZER AND ANCHOR STRAP: Securely fasten the riser pipe to the basin in the vertical position using a stabilizer and anchor strap that consists of a universal clamp or a strap and a block. Use only galvanized or stainless steel for metal components. All other materials must be rot resistant.

PAYMENT: All materials and labor, including excavation and backfill, are paid for at the contract price for **Item 611 - Water Quality Basin, Retention (Detention).**

MAXIMUM NUMBER OF PERFORATED COLUMNS				
RISER DIAMETER (in.)	HOLE DIAMETER, INCHES			
	¼"	½"	¾"	1"
4	8	8	--	--
6	12	12	9	
8	16	16	12	8
10	20	20	14	10
12	24	24	18	12

STATE OF OHIO DEPARTMENT OF TRANSPORTATION HYDRAULIC ENGINEER
Jeffery E. Syar

REVISIONS
4-16-04
7-20-12
1-18-13

ROADWAY HYDRAULIC ENGINEER
Humphreys

OFFICE OF HYDRAULICS ENGINEERING

STANDARD HYDRAULIC CONSTRUCTION DRAWING
WATER QUALITY BASINS

SCD NUMBER
WQ-1.1

I:\ODOTcadd\Standards\ODOT\Sheets\SCD\Hydraulics\WQ-1.1_2013-01-18.dgn Sheet 1/27/2017 10:20:38 AM jyoung6