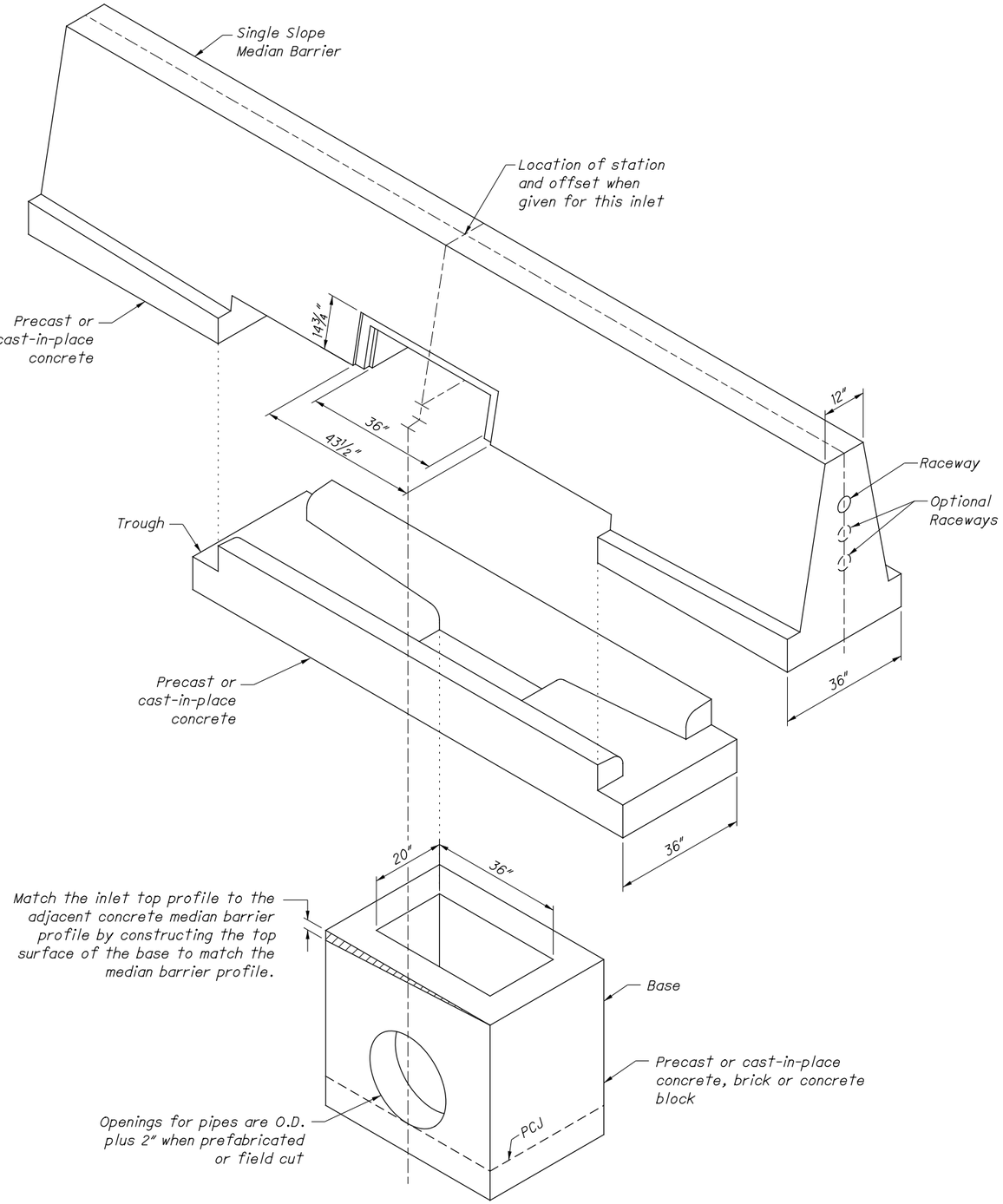

PICTORIAL VIEW

NOTES

GENERAL: For details of Single Slope Concrete Barriers, see SCD RM-4.3.

WALLS: The walls between the bottom slab and the upper permissible construction joint may be built of brick, concrete block or cast-in-place concrete, 8" nominal thickness for depths of 12' or less. Precast walls have a minimum thickness of 6" and are reinforced sufficiently to permit shipping and handling without damage.

CONCRETE: Provide 4000 psi compressive strength concrete when cast-in-place. When precast, provide concrete that meets the requirements of CMS 706.13. Mark the Inlet number on the structure. Seal the exposed concrete surfaces of the barrier per Item 512 when specified in the plans.

REINFORCING STEEL: Provide epoxy coated reinforcing steel in accordance with CMS 509.09.

FOOTING JOINTS: Provide a sealed joint with the vertical walls between the barrier footing and a concrete pavement or concrete base as detailed on SCD RM-4.3.

STEPS: Provide steps in accordance with SCD MH-1.1.

INLETS OVER 12 FEET IN DEPTH: Precast or cast-in-place inlets over 12 feet in depth. Reinforce with #5 bars on 12" centers both vertically and horizontally, with 2" clearance from the inside wall face.

OPENINGS: Ensure pipe openings are the outside diameter of the pipe being supplied plus 2" when fabricated or field cut. Fill any voids per C&MS 611.

ACCESS DOOR: Provide galvanized steel for the door, frame and all inserts. Provide stainless steel hex head bolts.

DEPRESSED APRON: Slope the aprons on both sides of the inlet toward windows and fill with 4000 psi compressive strength concrete. On superelevated sections, slope the aprons as shown in Section C-C.

PCJ: Permissible construction joint.

PAYMENT: Payment will be made at the unit price bid per Each for Item 611 - Inlet, No. 4 for Single Slope Barrier, Type ___ (B or B1) and includes all materials, reinforcing steel, inlets, raceways, wiring, labor and incidentals required to construct the inlet, as shown. Sealing of exposed concrete and sealing of the barrier will be paid for under Item 512 when specified in the plans.

LEGEND

1 Provide a 1½" minimum exp. joint in concrete pavement or concrete shoulders.

2 4" electrical raceway, if required elsewhere in the plans. See RACEWAY PLACEMENT Details on Sheet 3.

STANDARD INLET TYPES

INLET NO. 3	H	A	B	C	D
Type B	42"	4"	28"	4⅜"	27¼"
Type B1	57"	1⅛"	33¾"	1½"	33"

STATE OF OHIO DEPARTMENT OF TRANSPORTATION HYDRAULIC ENGINEER
Jeffery E. Syar

REVISIONS
7-15-05
10-21-11
7-20-12
1-18-13
1-17-14
1-15-16

ROADWAY HYDRAULIC ENGINEER
M. Cozzoli

OFFICE OF HYDRAULICS ENGINEERING

STANDARD HYDRAULIC CONSTRUCTION DRAWING
INLET No. 4 FOR SINGLE SLOPE BARRIER, TYPES B & B1

SCD NUMBER
I-2.4

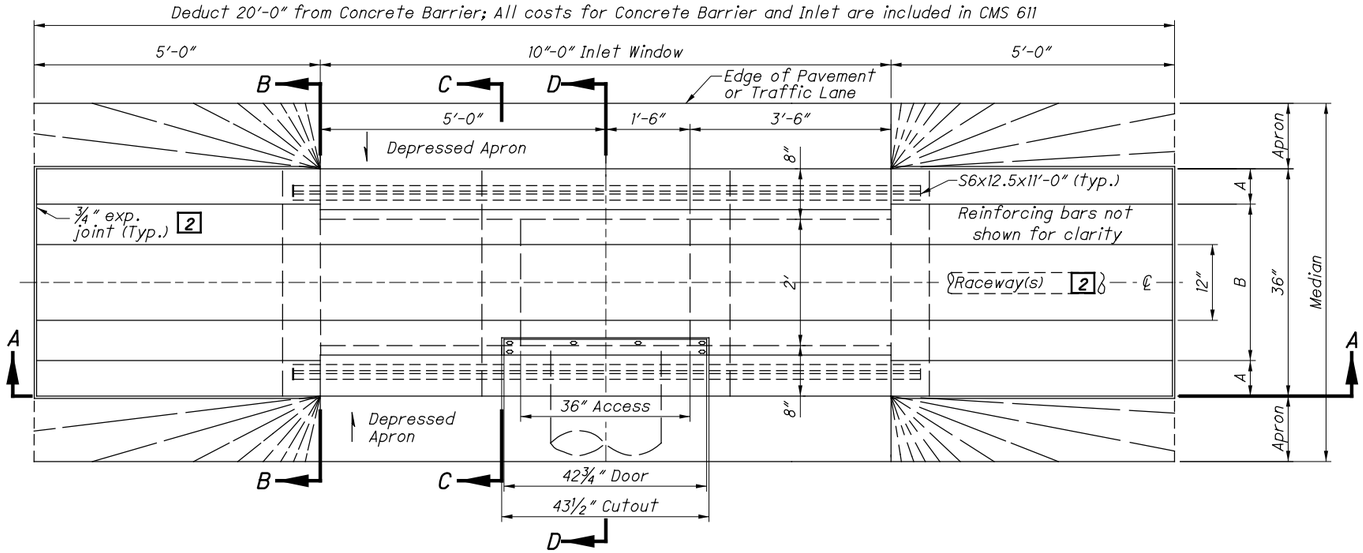

PLAN VIEW

NOT TO SCALE

For Dimensions H, A and B, see Standard Inlet Types on Sheet 1.

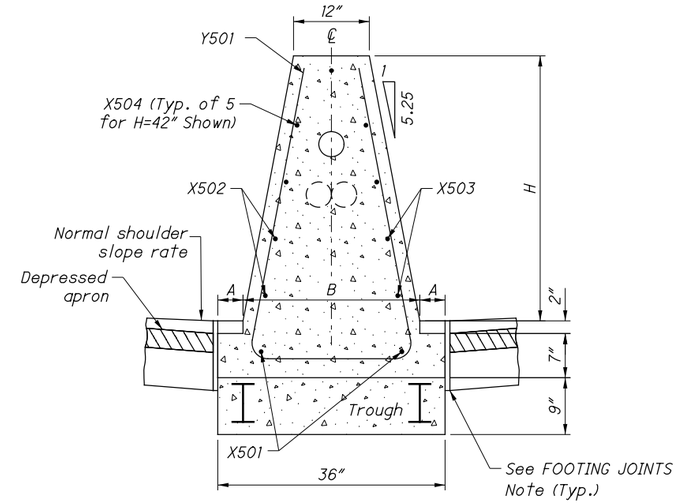

SECTION B-B

NS = Near Side
FS = Far Side

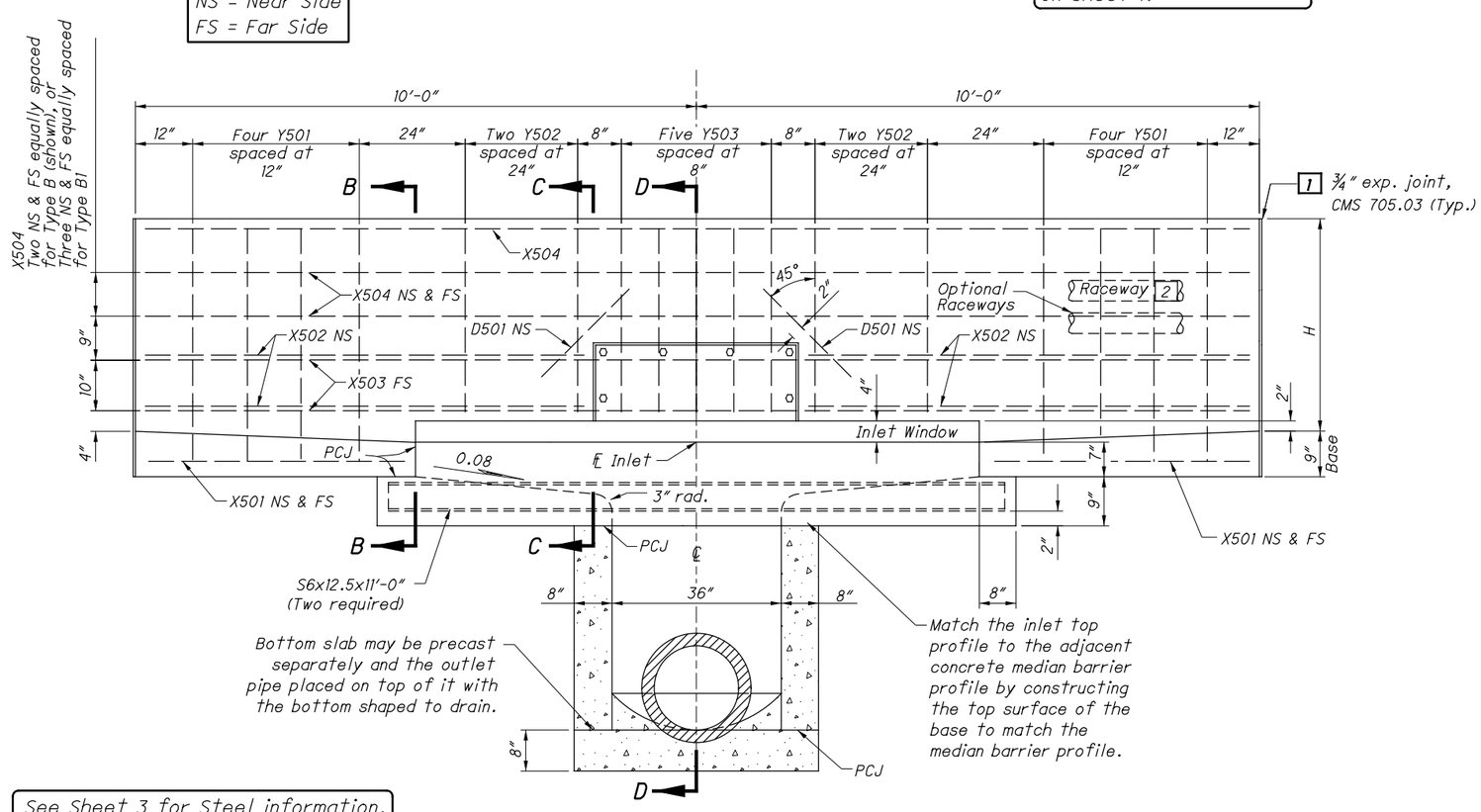

SECTION A-A

NOT TO SCALE

See Sheet 3 for Steel information, Bending Diagrams, and Access Door details.

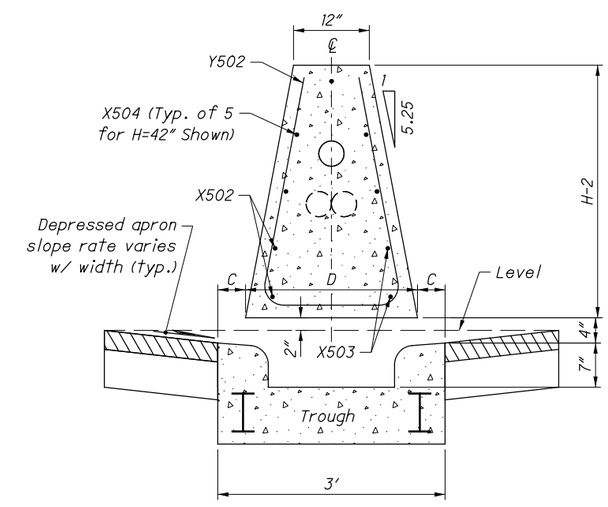

SECTION C-C

STATE OF OHIO DEPARTMENT OF TRANSPORTATION HYDRAULIC ENGINEER
Jeffery E. Syar

REVISIONS
7-15-05
10-21-11
7-20-12
1-18-13
1-17-14
1-15-16

ROADWAY HYDRAULIC ENGINEER
M. Cozzoli

OFFICE OF HYDRAULICS ENGINEERING

STANDARD HYDRAULIC CONSTRUCTION DRAWING

INLET No. 4 FOR SINGLE SLOPE BARRIER, TYPES B & B1

SCD NUMBER
I-2.4

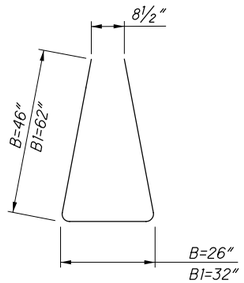

Y501

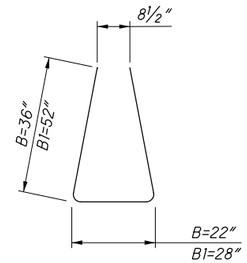

Y502

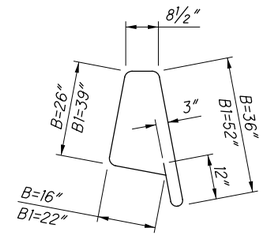

Y503

BENDING DIAGRAMS

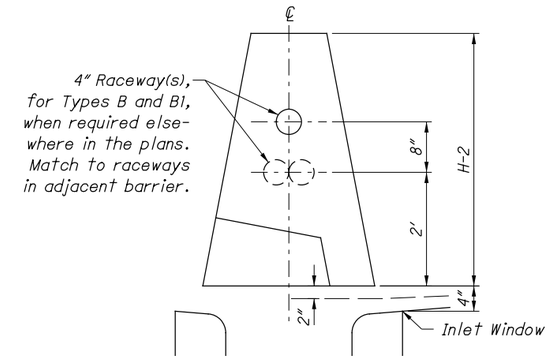

RACEWAY PLACEMENT
(Over Access Cutout)

STEEL LIST (For Estimating Purposes Only)																		
INLET NO. 4	X501 #5 bar		X502 #5 bar		X503 #5 bar		X504 #5 bar		Y501 #5 bar		Y502 #5 bar		Y503 #5 bar		D501 #5 bar		S6x12.5	
	Straight		Straight		Straight		Straight		Bent		Bent		Bent		Straight			
	No.	Length	No.	Length	No.	Length	No.	Length	No.	Length	No.	Length	No.	Length	No.	Length	No.	Length
Type B	4	4'-8"	4	7'-10"	2	19'-8"	5	19'-8"	8	9'-9"	4	7'-9"	5	7'-6"	2	2'-0"	2	11'-0"
Type B1	4	4'-8"	4	7'-10"	2	19'-8"	7	19'-8"	8	12'-9"	4	10'-9"	5	10'-5"	2	2'-0"	2	11'-0"

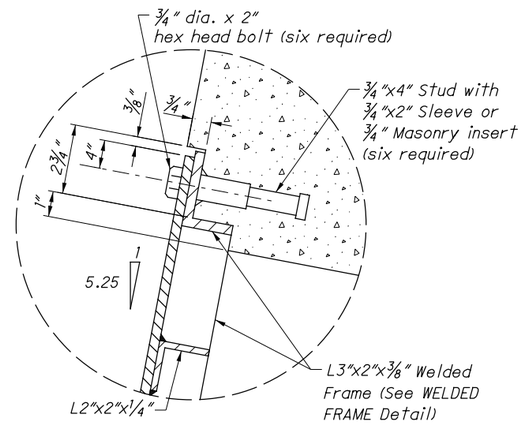

DETAIL A

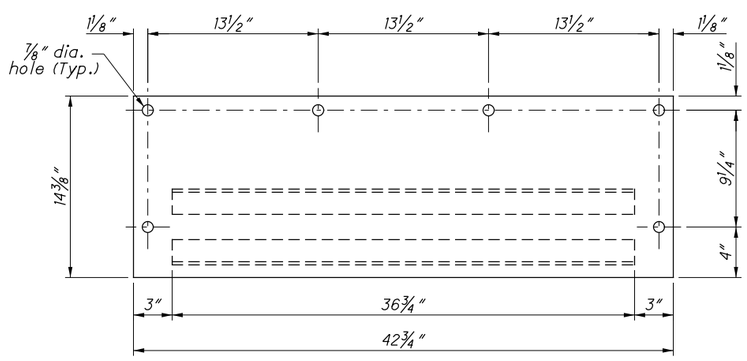

ACCESS DOOR DETAILS

See Sheet 1 for NOTES and LEGEND. See Sheet 2 for Plan, Elevation, and Section Views.

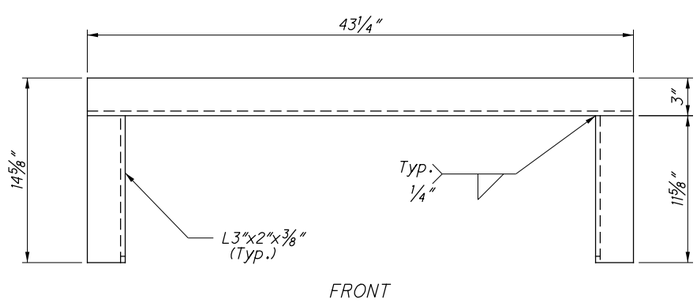

WELDED FRAME DETAIL

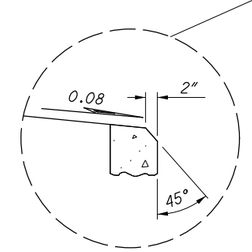

ALTERNATE SPILLWAY DETAIL

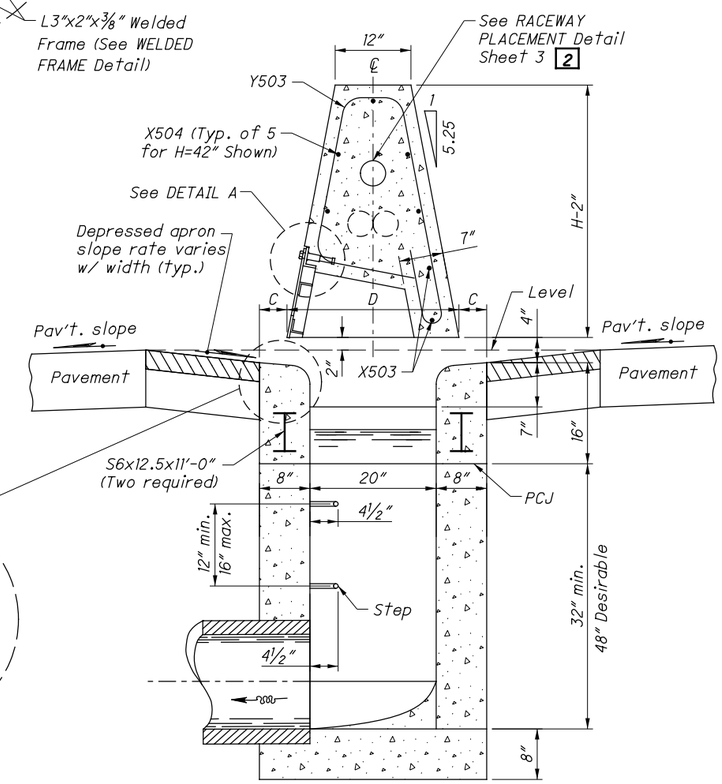

SECTION D-D
See Sheet 2

STATE OF OHIO DEPARTMENT OF TRANSPORTATION HYDRAULIC ENGINEER
Jeffery E. Syar

REVISIONS
7-15-05
10-21-11
7-20-12
1-18-13
1-17-14
1-15-16

ROADWAY HYDRAULIC ENGINEER
M. Cozzoli

OFFICE OF HYDRAULICS ENGINEERING

STANDARD HYDRAULIC CONSTRUCTION DRAWING
INLET No. 4 FOR SINGLE SLOPE BARRIER, TYPES B & B1

SCD NUMBER
I-2.4