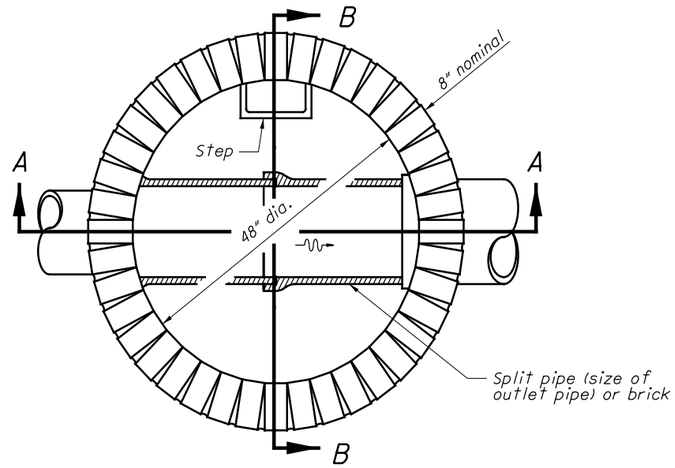

SECTION C-C

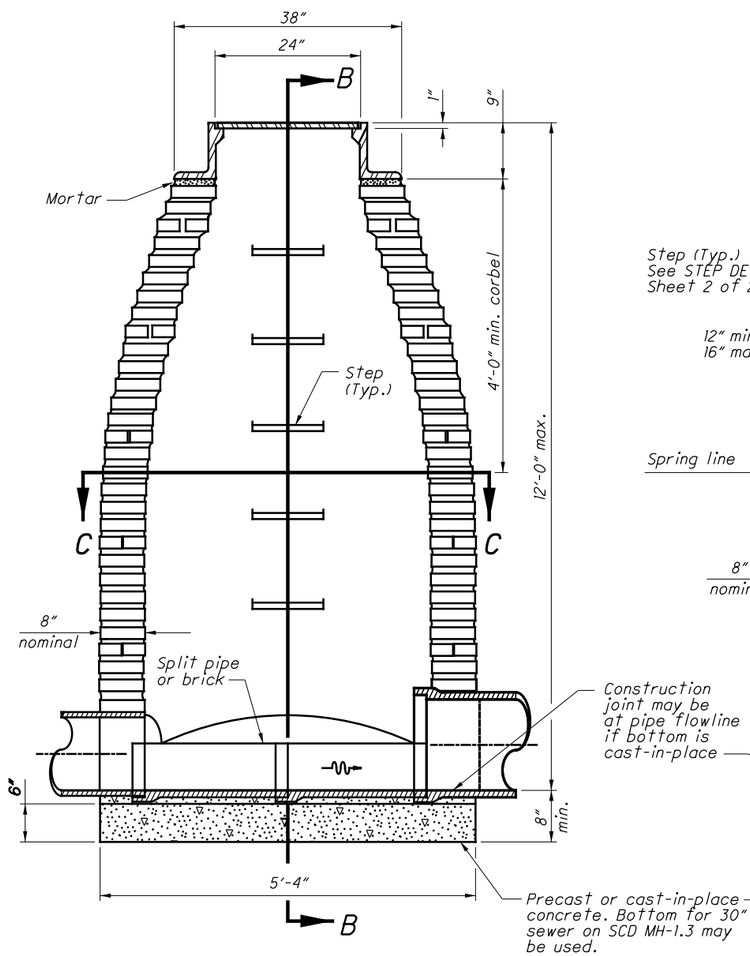

SECTION A-A

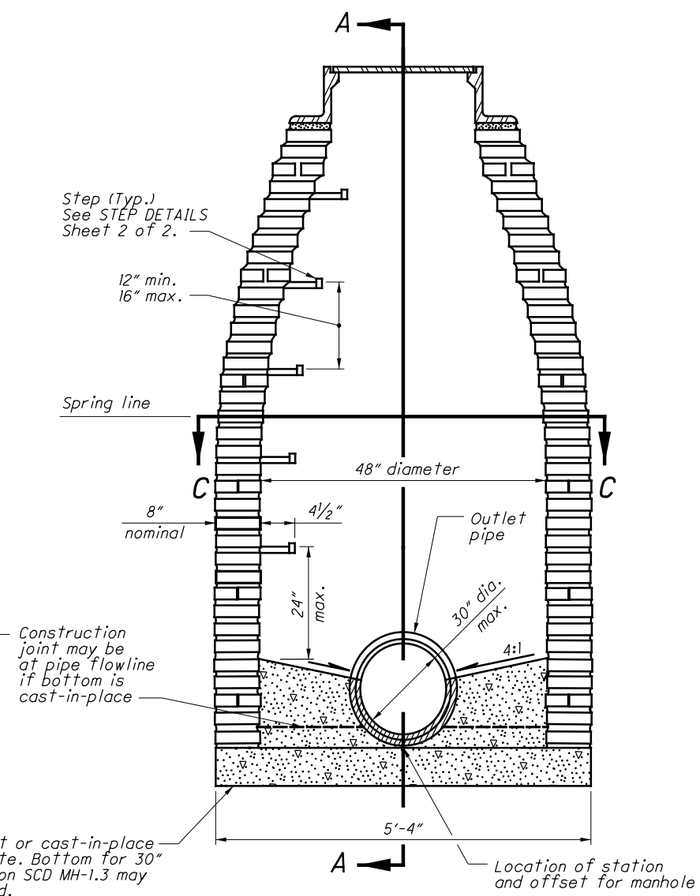

SECTION B-B

NOTES

CONSTRUCTION: Manhole No. 1 is for sewers 30" diameter or less. The design shown is for brick construction with every sixth course a stretcher course. The 6" bottom may be precast or cast-in-place concrete. Build the bottom channel section with concrete and line it with split pipe or brick, except curved channels may be formed in the concrete.

Precast solid concrete radial blocks or cast-in-place concrete reinforced with # 4 bars on 12" centers both vertically and horizontally may be used with a wall thickness of 6" or greater. Precast manholes detailed on SCD MH-1.2 OR MH-1.3 may be used instead of the design shown unless otherwise specified in the plans.

DROP PIPE: When specified on the plans, construct the drop pipe as shown on SCD MH-3.1.

SANITARY SEWER: Omit pick and vent holes shown here on cover and affix a sealing gasket to the bearing surface. Do not use bolt-down covers unless specified in the plans.

FRAME, COVER, AND STEPS: See Sheet 2 of 2 for these notes.

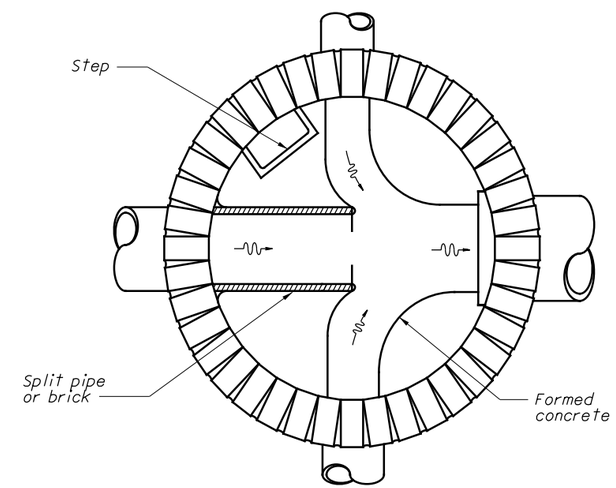

SECTION BELOW SPRING LINE SHOWING METHOD OF TURNING SIDE DRAINS

STATE OF OHIO DEPARTMENT OF TRANSPORTATION HYDRAULIC ENGINEER
Jeffery E. Syar

REVISIONS
7-20-01
7-19-02
7-20-12
1-18-13
1-15-16

ROADWAY HYDRAULIC ENGINEER
M. Cozzoli

OFFICE OF HYDRAULICS ENGINEERING

STANDARD HYDRAULIC CONSTRUCTION DRAWING
MANHOLE No. 1

SCD NUMBER
MH-1.1

1 / 2

I:\ODOTcadd\Standards\ODOT\Sheets\SCD\Hydraulics\MH-1.1_2016-01-15.dgn Sheet 1 1/27/2017 10:30:36 AM jyoung6

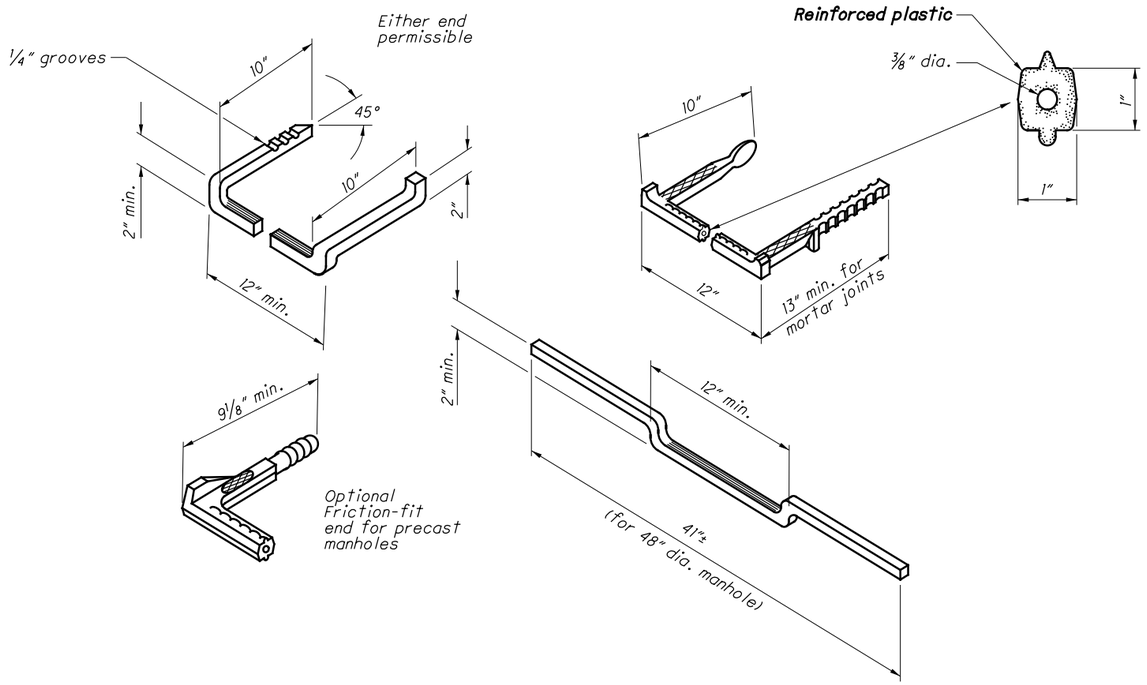

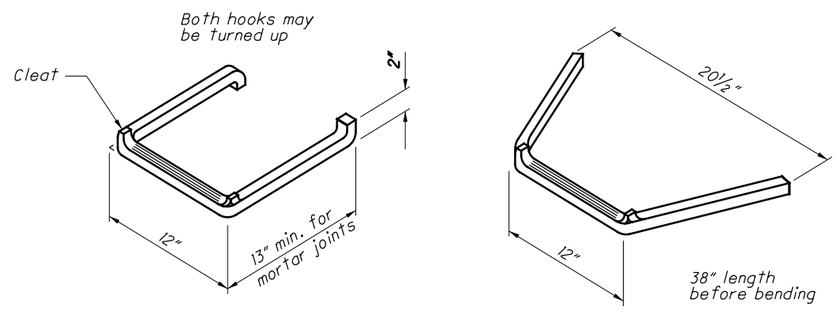

Steps have a minimum cross sectional dimension of 1" for ferrous metal 3/4" for aluminum.

STEP DETAILS

NOTES

GENERAL: See Sheet 1 of 2 for additional notes.

FRAME AND COVER: Provide a frame and cover that meet CMS 711.14 requirements. Each cover must seat in its frame without rocking and be marked as a matched frame and cover before delivery to the project. Set the base of the frame in a full bed of Portland cement mortar and adjust it to conform to the finished pavement or shoulder elevation and slope.

STEPS: Provide steps that conform to the material requirements of CMS 611 and have a depressed tread or a 1/2" minimum cleat height at the ends.

Embed steps installed in fresh concrete at least 4" deep. Embed steps installed in mortar joints at least 7" deep.

Friction-fit steps meeting the requirements of CMS 711.31 with rebar may be used in precast manholes. Do not allow the receiving holes for friction-fit steps to penetrate the manhole walls.

The Engineer may require the contractor to test load a maximum of one step per manhole to a proof load of 400 lbs. in direct pull. Meet the approval of the Engineer with the equipment and method used. If the selected step fails the pull-out test, also test the remaining steps in that manhole. Remove all steps not passing the pull-out test, and install and test a new step to the satisfaction of the Engineer. Cost of testing is incidental to the unit price bid for the manhole.

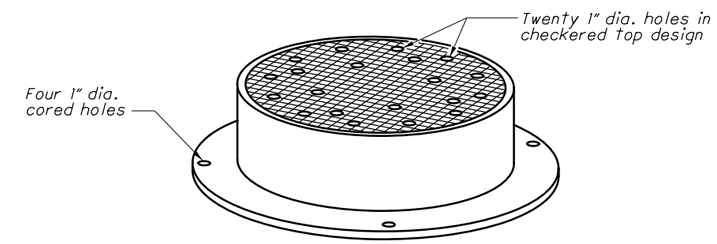

FRAME & COVER

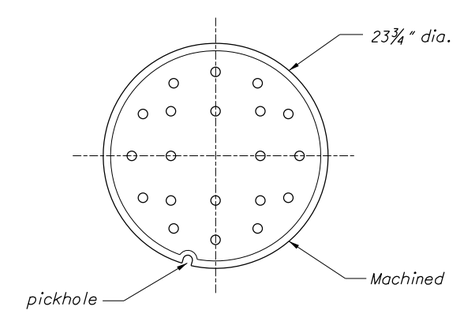

COVER

STATE OF OHIO DEPARTMENT OF TRANSPORTATION HYDRAULIC ENGINEER
Jeffery E. Syar

REVISIONS
7-20-01
7-19-02
7-20-12
1-18-13
1-15-16

ROADWAY HYDRAULIC ENGINEER
M. Cozzoli

OFFICE OF HYDRAULICS ENGINEERING

STANDARD HYDRAULIC CONSTRUCTION DRAWING
MANHOLE No. 1

SCD NUMBER
MH-1.1

I:\ODOTcadd\Standards\ODOT\Sheets\SCD\Hydraulics\MH-1.1_2016-01-15.dgn Sheet 2 1/27/2017 10:30:36 AM jyoung6