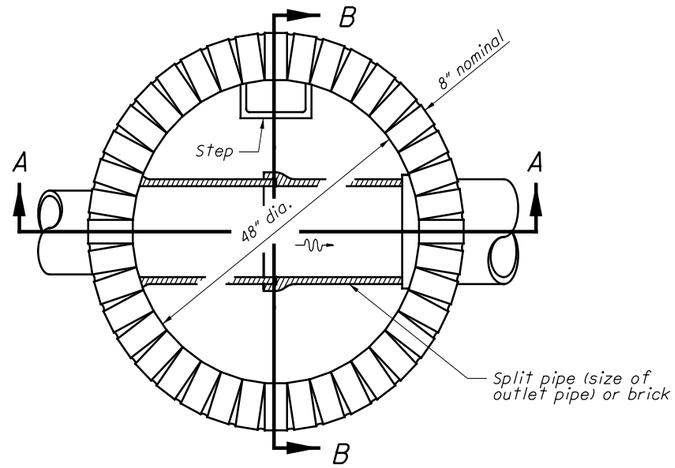

SECTION C-C

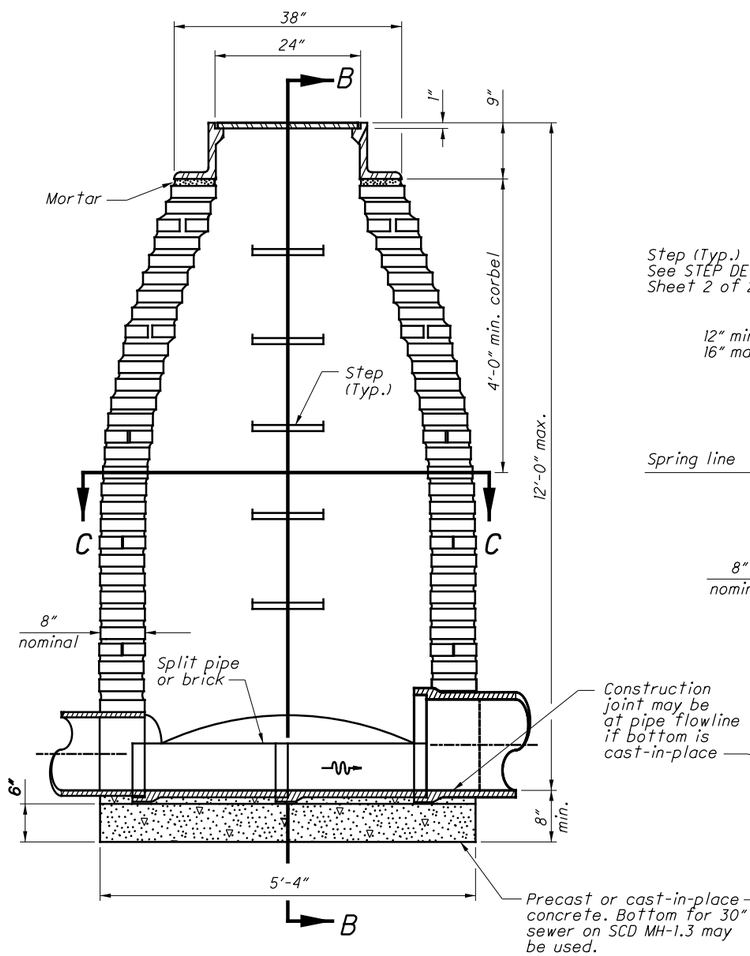

SECTION A-A

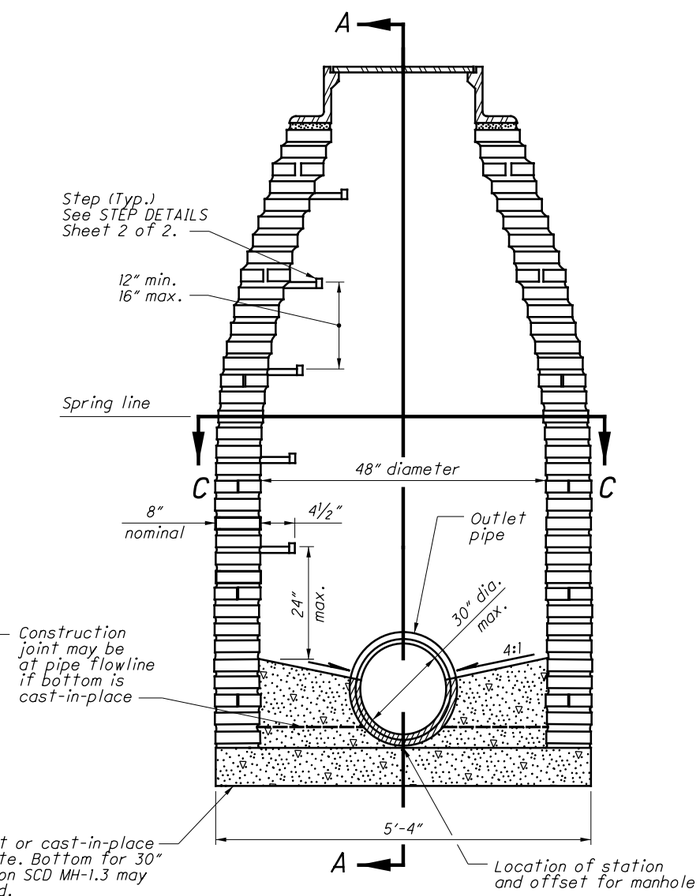

SECTION B-B

NOTES

CONSTRUCTION: Manhole No. 1 is for sewers 30" diameter or less. The design shown is for brick construction with every sixth course a stretcher course. The 6" bottom may be precast or cast-in-place concrete. Build the bottom channel section with concrete and line it with split pipe or brick, except curved channels may be formed in the concrete.

Precast solid concrete radial blocks or cast-in-place concrete reinforced with # 4 bars on 12" centers both vertically and horizontally may be used with a wall thickness of 6" or greater. Precast manholes detailed on SCD MH-1.2 OR MH-1.3 may be used instead of the design shown unless otherwise specified in the plans.

DROP PIPE: When specified on the plans, construct the drop pipe as shown on SCD MH-3.1.

SANITARY SEWER: Omit pick and vent holes shown here on cover and affix a sealing gasket to the bearing surface. Do not use bolt-down covers unless specified in the plans.

FRAME, COVER, AND STEPS: See Sheet 2 of 2 for these notes.

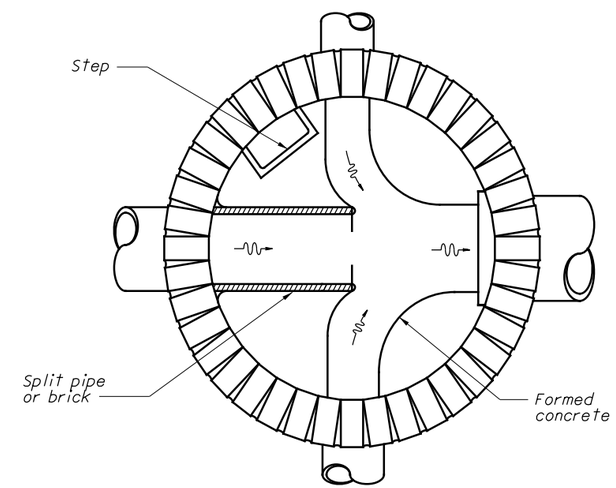

SECTION BELOW SPRING LINE SHOWING METHOD OF TURNING SIDE DRAINS

STATE OF OHIO DEPARTMENT OF TRANSPORTATION HYDRAULIC ENGINEER
Jeffery E. Syar

REVISIONS
7-20-01
7-19-02
7-20-12
1-18-13
1-15-16

ROADWAY HYDRAULIC ENGINEER
M. Cozzoli

OFFICE OF HYDRAULICS ENGINEERING

STANDARD HYDRAULIC CONSTRUCTION DRAWING
MANHOLE No. 1

SCD NUMBER
MH-1.1

1 / 2

I:\ODOTcadd\Standards\ODOT\Sheets\SCD\Hydraulics\MH-1.1_2016-01-15.dgn Sheet 1 1/27/2017 10:30:36 AM jyoung6

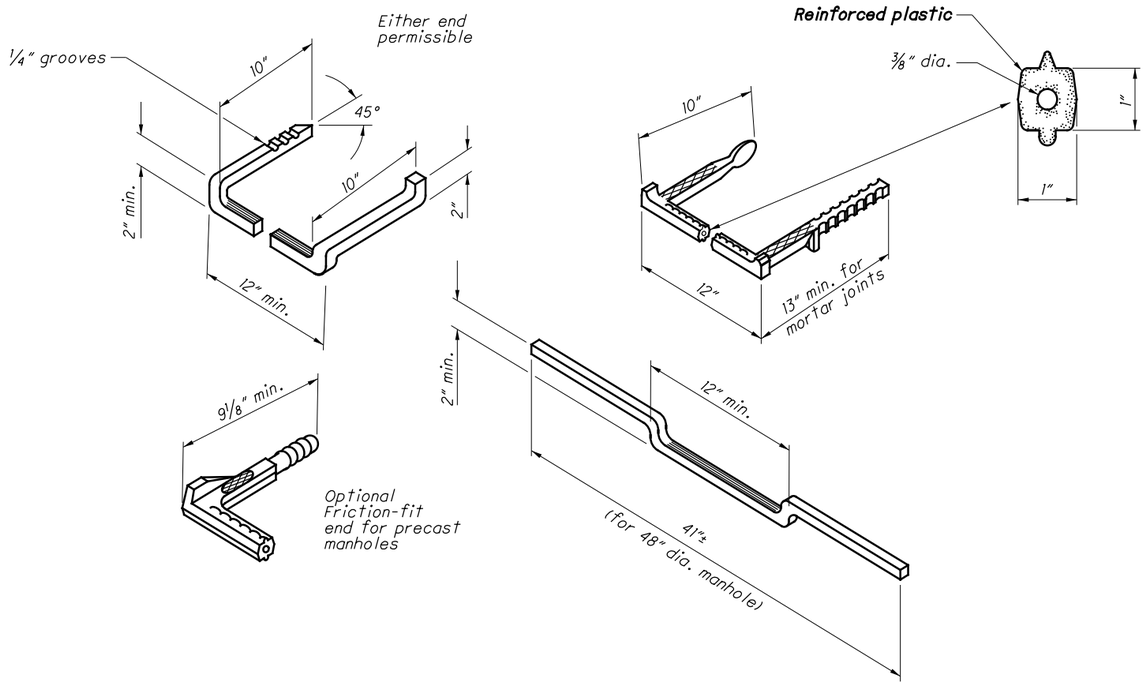

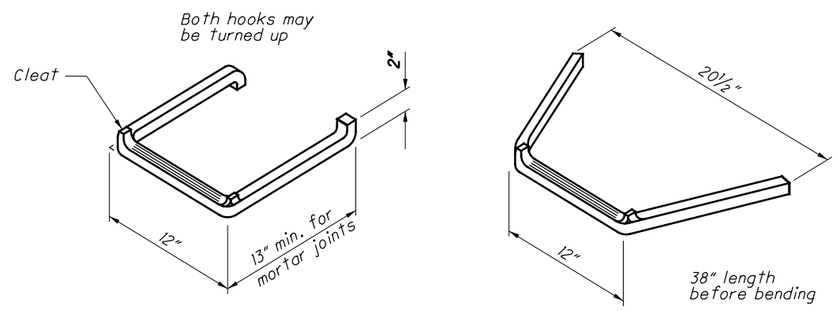

Steps have a minimum cross sectional dimension of 1" for ferrous metal 3/4" for aluminum.

STEP DETAILS

NOTES

GENERAL: See Sheet 1 of 2 for additional notes.

FRAME AND COVER: Provide a frame and cover that meet CMS 711.14 requirements. Each cover must seat in its frame without rocking and be marked as a matched frame and cover before delivery to the project. Set the base of the frame in a full bed of Portland cement mortar and adjust it to conform to the finished pavement or shoulder elevation and slope.

STEPS: Provide steps that conform to the material requirements of CMS 611 and have a depressed tread or a 1/2" minimum cleat height at the ends.

Embed steps installed in fresh concrete at least 4" deep. Embed steps installed in mortar joints at least 7" deep.

Friction-fit steps meeting the requirements of CMS 711.31 with rebar may be used in precast manholes. Do not allow the receiving holes for friction-fit steps to penetrate the manhole walls.

The Engineer may require the contractor to test load a maximum of one step per manhole to a proof load of 400 lbs. in direct pull. Meet the approval of the Engineer with the equipment and method used. If the selected step fails the pull-out test, also test the remaining steps in that manhole. Remove all steps not passing the pull-out test, and install and test a new step to the satisfaction of the Engineer. Cost of testing is incidental to the unit price bid for the manhole.

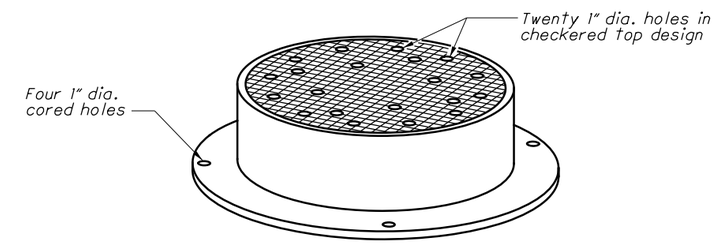

FRAME & COVER

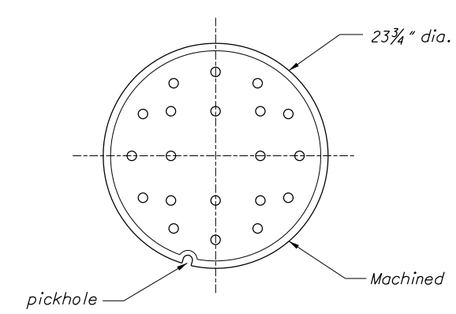

COVER

STATE OF OHIO DEPARTMENT OF TRANSPORTATION HYDRAULIC ENGINEER
Jeffery E. Syar

REVISIONS
7-20-01
7-19-02
7-20-12
1-18-13
1-15-16

ROADWAY HYDRAULIC ENGINEER
M. Cozzoli

OFFICE OF HYDRAULICS ENGINEERING

STANDARD HYDRAULIC CONSTRUCTION DRAWING
MANHOLE No. 1

SCD NUMBER
MH-1.1

I:\ODOTcadd\Standards\ODOT\Sheets\SCD\Hydraulics\MH-1.1_2016-01-15.dgn Sheet 2 1/27/2017 10:30:36 AM jyoung6

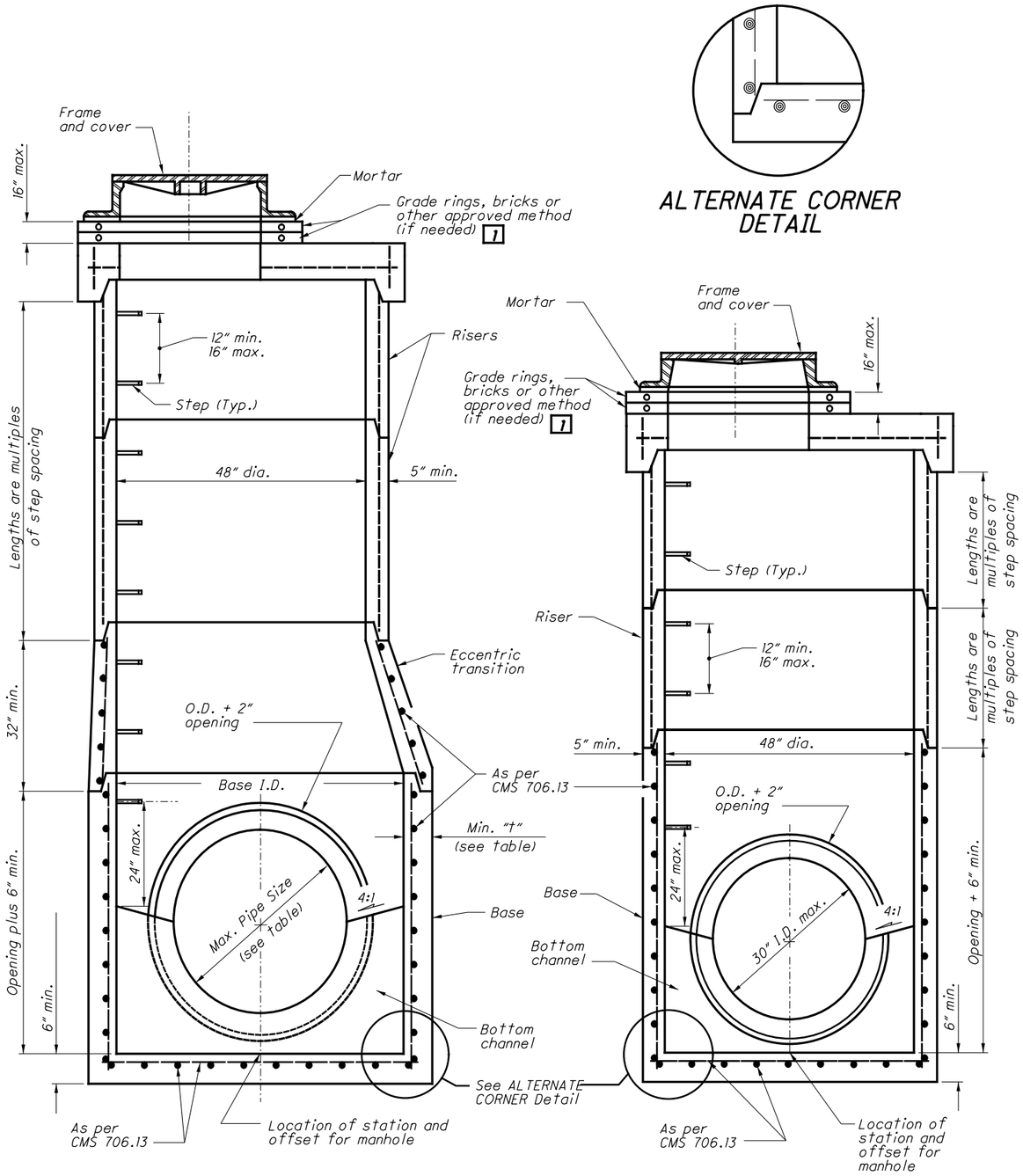

60" to 108" PRECAST BASE

SEE TABLE FOR MAXIMUM PIPE SIZES

48" PRECAST BASE

FOR 30" AND SMALLER PIPE

SECTION VIEWS OF REINFORCED PRECAST MANHOLES

NOTES

GENERAL: With normal soil and site conditions, this standard precast manhole may be used for any required manhole depth.
Cast and assemble sections of the precast manhole with either all tongue or all groove ends up. Lift holes may be provided in each section for handling.
Leave handling device for the flat slab in place.

TOP: Provide a flat slab for this section unless an eccentric cone is specified.

TRANSITION (OR REDUCER): This section can be either eccentric cone or flat slab.

BASE: Manhole No. 3 is shown with a monolithic floor and riser which may be cast in one or two operations. A permissible alternate is to cast and ship the floor and barrel separately. Provide openings for inlet and outlet pipes, either when the unit is cast or later, to meet project requirements. Bottom channels may be formed of concrete, precast in the base or field constructed as shown on **SCD MH-1.1 and MH-3.1.**

RISER SECTIONS: Openings for 18" and smaller inlet pipes may be either prefabricated or cut in the field provided the sides of the pipe at the springline do not project into the manhole.

CONNECTIONS: Connections between precast manhole sections and pipes on sanitary sewers may be sealed with resilient connectors conforming to ASTM C 923.

JOINT SEAL: Furnish resilient seal between precast manhole sections on sanitary sewers and flexible gasket joints per CMS 706.11.

OPENINGS: Ensure pipe openings are the O.D. of the pipe being supplied plus 2" when fabricated or field cut. Fill any voids per C&MS 611.

MATERIALS: Provide materials for bases and other precast sections, including reinforcement not specified here, that meet the requirements of CMS 706.13.

DROP PIPE: When specified on the plans, construct drop pipe as shown on **SCD MH-3.1.**

STEPS, FRAMES AND COVERS: Meet the requirements shown on **SCD MH-1.1.**

TOP SLAB REBAR: Use epoxy coated reinforcing steel within the top slab.

LEGEND

1 Reconstruction to grade only. Approved materials are kept on file by the Office of Materials Management.

MAXIMUM PIPE SIZES		
BASE I.D.	**MIN. "t"**	**MAX. PIPE SIZE**
60"	5"	36"
72"	6"	48"
84"	7"	54"
90"	7½"	60"
96"	8"	66"
108"	9"	72"

STATE OF OHIO DEPARTMENT OF TRANSPORTATION HYDRAULIC ENGINEER
Jeffery E. Syar

REVISIONS
7-20-01
7-19-02
7-15-05
1-20-06
7-20-12
1-18-13
1-15-16

ROADWAY HYDRAULIC ENGINEER
M. Cozzoli

OFFICE OF HYDRAULICS ENGINEERING

STANDARD HYDRAULIC CONSTRUCTION DRAWING
MANHOLE No. 3

SCD NUMBER
MH-1.2

I:\ODOTcadd\Standards\ODOT\Sheets\SCD\Hydraulics\MH-1.2_2016-01-15.dgn Sheet 1 1/27/2017 10:30:50 AM jyoung6

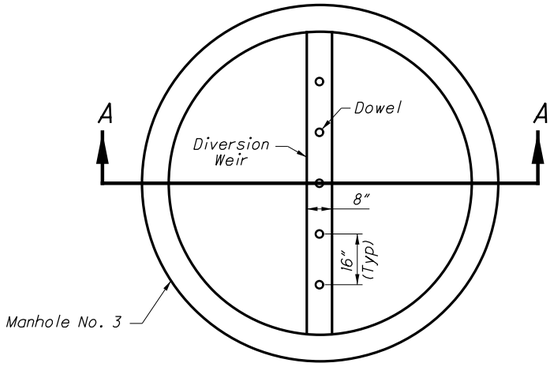

MANHOLE NO. 3 W/
__" BASE I.D. AND __" WEIR
(NTS)

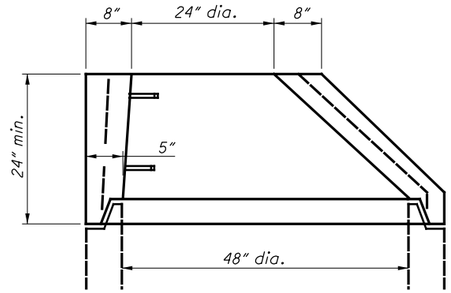

ALTERNATE
ECCENTRIC CONE TOP
(Only if specified)

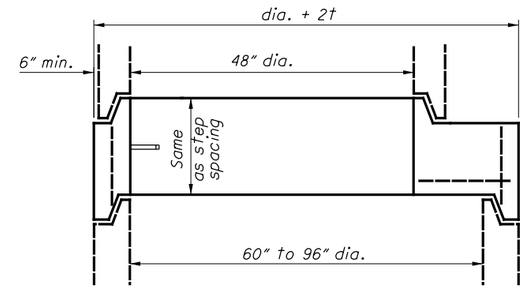

FLAT SLAB TRANSITION

NOTES

MANHOLE NO. 3 W/__" BASE I.D. AND __" DIVERSION WEIR: Furnish manhole base with precast diversion weir or construct diversion weir from Structural Concrete, 4000 psi compressive strength concrete or Brick and Masonry Units conforming to CMS 611. A bottom channel section for the manhole is not required when a diversion weir is specified on the plans.

Place diversion weir perpendicular to flow of inflowing trunk sewer. Dowel concrete or masonry units into the base of the manhole to a depth of 3" using epoxy coated #4 reinforcing bars. Start dowels at the center of the diversion weir and space 16" on center across the entire weir.

All materials and labor, including excavation and backfill, are paid for at the contract price for **ITEM 611 - MANHOLE NO. 3 WITH __" BASE I.D. AND __" DIVERSION WEIR.**

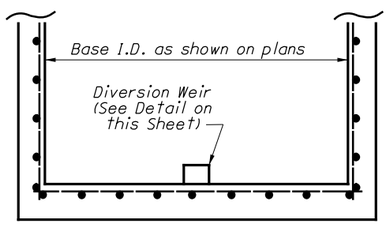

SECTION A-A
(NTS)

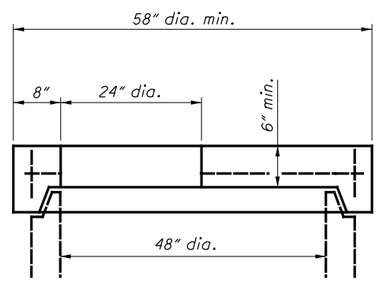

FLAT SLAB TOP

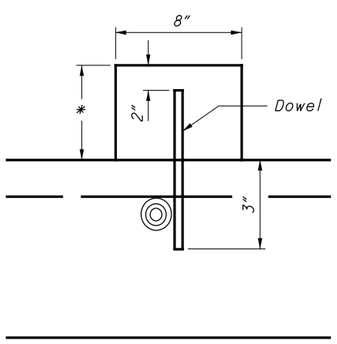

* Furnish weir height as shown in plans.

DIVERSION WEIR DETAIL
(NTS)

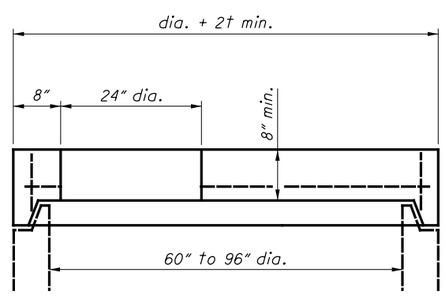

FLAT SLAB TOP

STATE OF OHIO DEPARTMENT OF TRANSPORTATION HYDRAULIC ENGINEER
Jeffery E. Syar

REVISIONS
7-20-01
7-19-02
7-15-05
1-20-06
7-20-12
1-18-13
1-15-16

ROADWAY HYDRAULIC ENGINEER
M. Cozzoli

OFFICE OF HYDRAULICS ENGINEERING

STANDARD HYDRAULIC CONSTRUCTION DRAWING
MANHOLE No. 3

SCD NUMBER
MH-1.2

I:\ODOTcadd\Standards\ODOT\Sheets\SCD\Hydraulics\MH-1.2_2016-01-15.dgn Sheet 2 1/27/2017 10:30:50 AM jyoung6

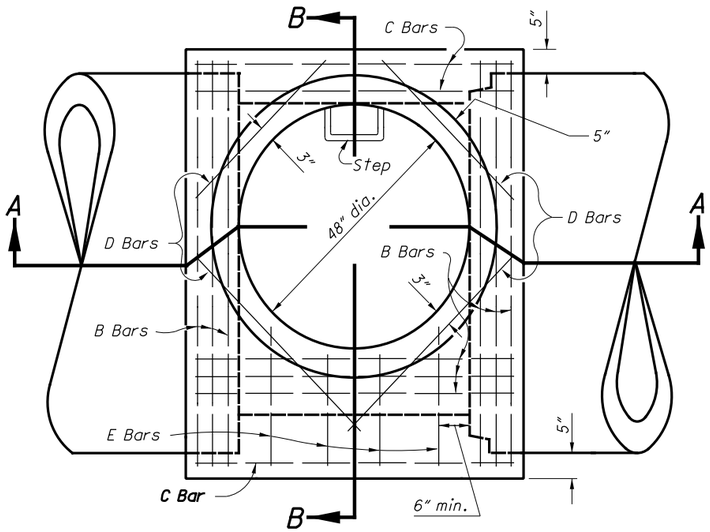

PLAN VIEW

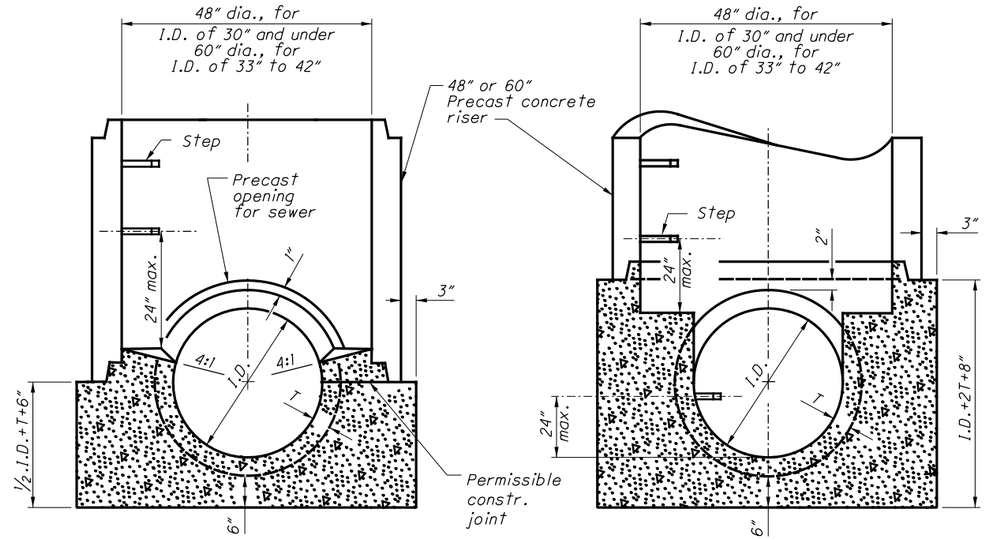

MANHOLE BASE ON SEWER 42" AND UNDER

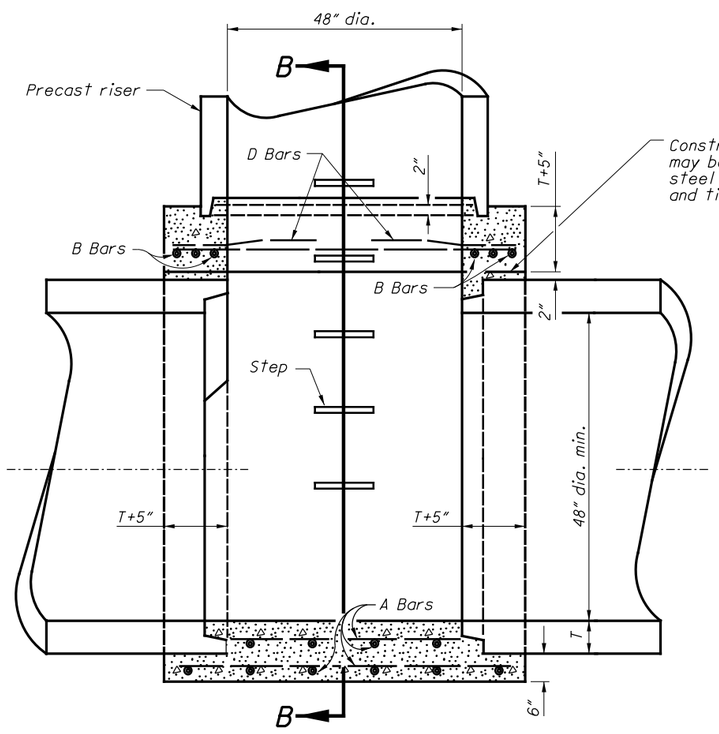

SECTION A-A

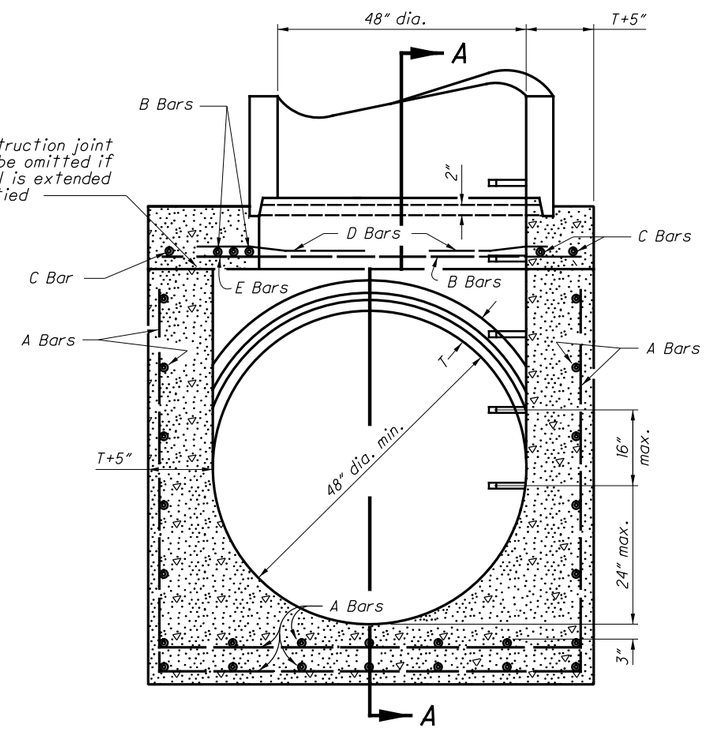

SECTION B-B

MANHOLE BASE ON SEWER 42" AND OVER

NOTES

MANHOLE: Manhole No. 5 consists of a base or bottom as detailed here and other manhole components as detailed or specified on **SCD MH-1.2.** Instead of the tongue and groove junction between the riser and the base, the base may have a flat surface and the riser may have a square end set in a bed of mortar on the base.

OPENINGS: Provide prefabricated openings for 42" and under inlet and outlet sewer pipes in the riser section unless the base is built to an elevation 2" above the manhole top of the inlet and outlet pipes.

CONCRETE: Use 4000 psi compressive strength concrete for the bases or meet the requirements of CMS 706.13. The bases may be precast or cast-in-place. If precast, provide a base on sewers 42" and under with sufficient steel reinforcement to permit shipping and placement without damage to the base. Reinforce the base on sewers 48" and over as shown.

STEPS: Provide steps that meet the requirements set forth on **SCD MH-1.1.**

T = Wall thickness of intercepting sewer pipe

REINFORCING STEEL LIST

BAR	SPACING	BAR SIZES FOR SEWERS		
		48" to 60"	66" to 78"	84" to 96"
A	12" c/c both ways	#5	#6	#7
B	3" c/c both ways	#5	#6	#7
C	as shown	#5	#6	#7
D	as shown	#5	#5	#5
E	12" c/c	#5	#5	#5

Included for estimating purposes only. The cost of furnishing and placing all reinforcing steel is included in Item 611 for payment.

THIS DRAWING REPLACES MH-1.3M DATED 9-6-95.

STATE OF OHIO DEPARTMENT OF TRANSPORTATION HYDRAULIC ENGINEER
Jeffery E. Syar

REVISIONS
7-20-01
7-20-12
1-18-13

ROADWAY HYDRAULIC ENGINEER
M. Cozzoli

OFFICE OF HYDRAULICS ENGINEERING

STANDARD HYDRAULIC CONSTRUCTION DRAWING
MANHOLE No. 5

SCD NUMBER
MH-1.3

1 / 1

I:\ODOTcadd\Standards\ODOT\Sheets\SCD\Hydraulics\MH-1.3_2013-01-18.dgn Sheet 1/27/2017 10:20:26 AM jyoung6

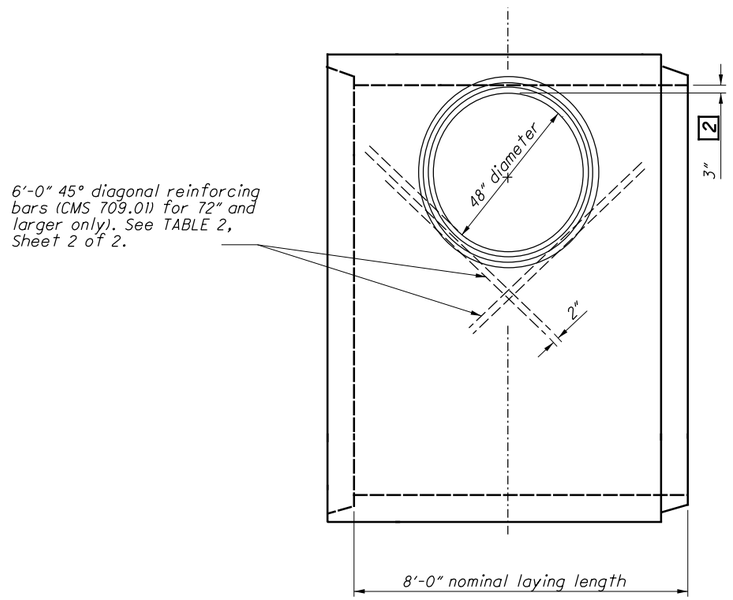

PLAN VIEW

LEGEND

1. If required by conduit specification.
2. On all sizes except 48".
3. One-half of the required number to each side of hole. (See Sht. 2/2.)

NOTES

GENERAL: Base pipe, 48" dia. through 144" dia., consists of the design shown and as required for the stronger of the two adjoining sections of conduit. Provide other manhole components above the base as detailed or specified on **SCD MH-1.2.**

APPLICATION: The Manhole No. 4 shown here may be used where no change in pipe size, direction or slope occurs, and no lateral sewers enter the manhole below the riser section.

BEDDING: Provide the same bedding as used under the adjoining conduits that meets the requirements of CMS 611.06.

STEPS: Provide steps that meet the requirements of **SCD MH-1.1.**

PAYMENT: Payment for Manhole No. 4 includes only the cost of the eccentric spur, additional pipe reinforcing, concrete backing, steps, riser sections, rings, castings and drop pipes. No deductions will be made in the lengths of the sanitary sewer conduit.

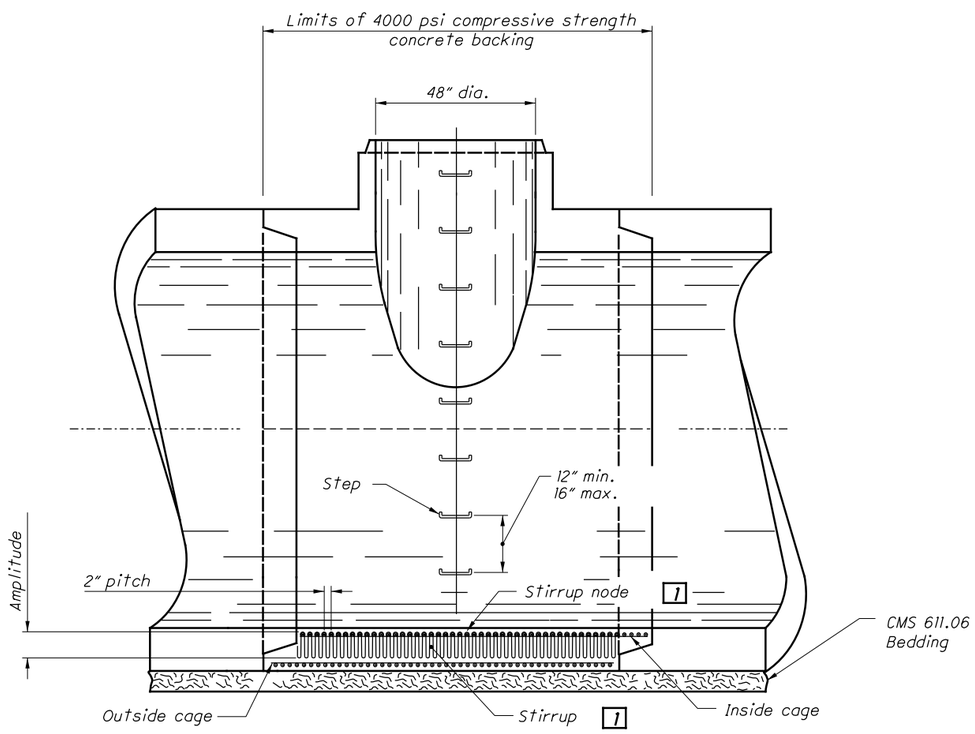

SECTION A-A

(Showing stirrup detail)

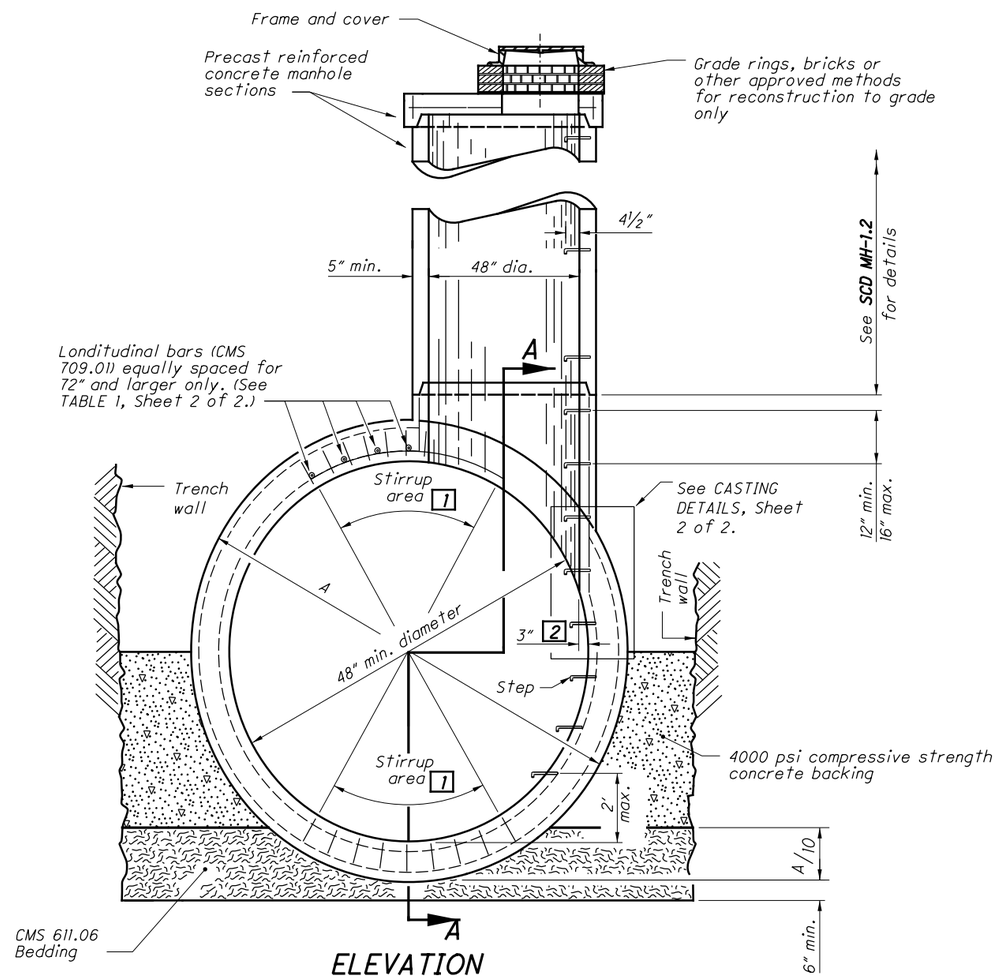

ELEVATION

STATE OF OHIO DEPARTMENT OF TRANSPORTATION HYDRAULIC ENGINEER
Jeffery E. Syar

REVISIONS
7-20-01
7-19-02
7-20-12
1-18-13

ROADWAY HYDRAULIC ENGINEER
M. Cozzoli

OFFICE OF HYDRAULICS ENGINEERING

STANDARD HYDRAULIC CONSTRUCTION DRAWING
MANHOLE No. 4

SCD NUMBER
MH-2.1

1 / 2

I:\ODOTcadd\Standards\ODOT\Sheets\SCD\Hydraulics\MH-2.1_2013-01-18.dgn Sheet 1 1/27/2017 10:31:07 AM jyoung6

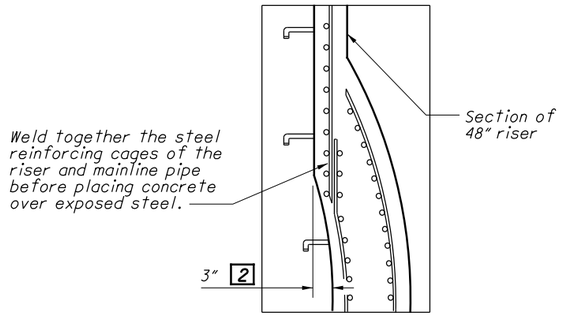

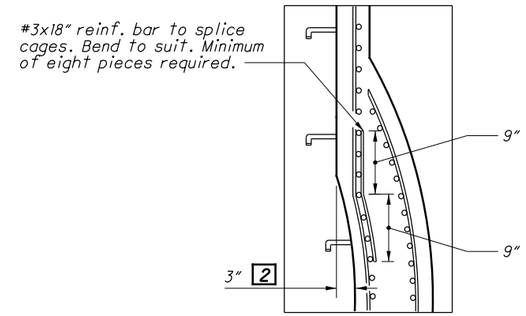

LEGEND

1 If required by conduit specification. (See Sht. 1/2.)

2 On all sizes except 48".

3 One-half of the required number to each side of hole.

INTEGRALLY CAST

See ELEVATION Detail, Sheet 1 of 2.

CASTING DETAILS

See ELEVATION Detail, Sheet 1 of 2.

TABLE 1 (English)

D-LOAD	1000			1350			2000			3000		
Dia.	Longitudinal Bars			Longitudinal Bars			Longitudinal Bars			Longitudinal Bars		
	Size	Length	No. Req'd	Size	Length	No. Req'd	Size	Length	No. Req'd	Size	Length	No. Req'd
72"	#5	7'-5"	4	#5	7'-5"	4	#5	7'-5"	4	#5	7'-5"	4
78"	#6	7'-5"	4	#6	7'-5"	4	#6	7'-5"	4	#6	7'-5"	4
84"	#6	7'-5"	4	#6	7'-5"	4	#6	7'-5"	4	#6	7'-5"	4
90"	#6	7'-5"	4	#6	7'-5"	4	#6	7'-5"	4	#6	7'-5"	4
96"	#6	7'-5"	4	#6	7'-5"	4	#6	7'-5"	4	#6	7'-5"	4
102"	#6	7'-5"	4	#6	7'-5"	4	#6	7'-5"	4	#6	7'-5"	4
108"	#6	7'-5"	4	#6	7'-5"	4	#6	7'-5"	4	#6	7'-5"	4
114"	#5	7'-5"	6	#5	7'-5"	6	#5	7'-5"	6	#5	7'-5"	6
120"	#7	7'-5"	4	#7	7'-5"	4	#7	7'-5"	4	#7	7'-5"	4
126"	#7	7'-5"	4	#7	7'-5"	4	#7	7'-5"	4	#7	7'-5"	4
132"	#7	7'-5"	4	#7	7'-5"	4	#7	7'-5"	4	#7	7'-5"	4
144"	#7	7'-5"	4	#7	7'-5"	4	#7	7'-5"	4	#7	7'-5"	4

See PLAN VIEW Detail, Sheet 1 of 2.

TABLE 2 (English)

D-LOAD	1000		1350		2000		3000	
Dia.	Diag. Bars		Diag. Bars		Diag. Bars		Diag. Bars	
	Size	No. 3 Req'd	Size	No. 3 Req'd	Size	No. 3 Req'd	Size	No. 3 Req'd
72"	#5	2	#5	2	#5	4	#5	4
78"	#5	2	#5	2	#5	4	#6	4
84"	#5	2	#4	4	#5	4	#6	4
90"	#5	2	#4	4	#5	4	#6	4
96"	#5	2	#4	4	#5	4	#7	4
102"	#4	4	#5	4	#6	4	#7	4
108"	#4	4	#5	4	#6	4	#7	4
114"	#4	4	#5	4	#6	4	#7	4
120"	#5	4	#5	4	#6	4	#6	6
126"	#5	4	#5	4	#6	4	#6	6
132"	#5	4	#5	4	#7	4	#7	6
144"	#5	4	#6	4	#7	4	#7	6

STATE OF OHIO DEPARTMENT OF TRANSPORTATION HYDRAULIC ENGINEER
Jeffery E. Syar

REVISIONS
7-20-01
7-19-02
7-20-12
1-18-13

ROADWAY HYDRAULIC ENGINEER
M. Cozzoli

OFFICE OF HYDRAULICS ENGINEERING

STANDARD HYDRAULIC CONSTRUCTION DRAWING
MANHOLE No. 4

SCD NUMBER
MH-2.1

I:\ODOTcadd\Standards\ODOT\Sheets\SCD\Hydraulics\MH-2.1_2013-01-18.dgn Sheet 2 1/27/2017 10:31:07 AM jyoung6

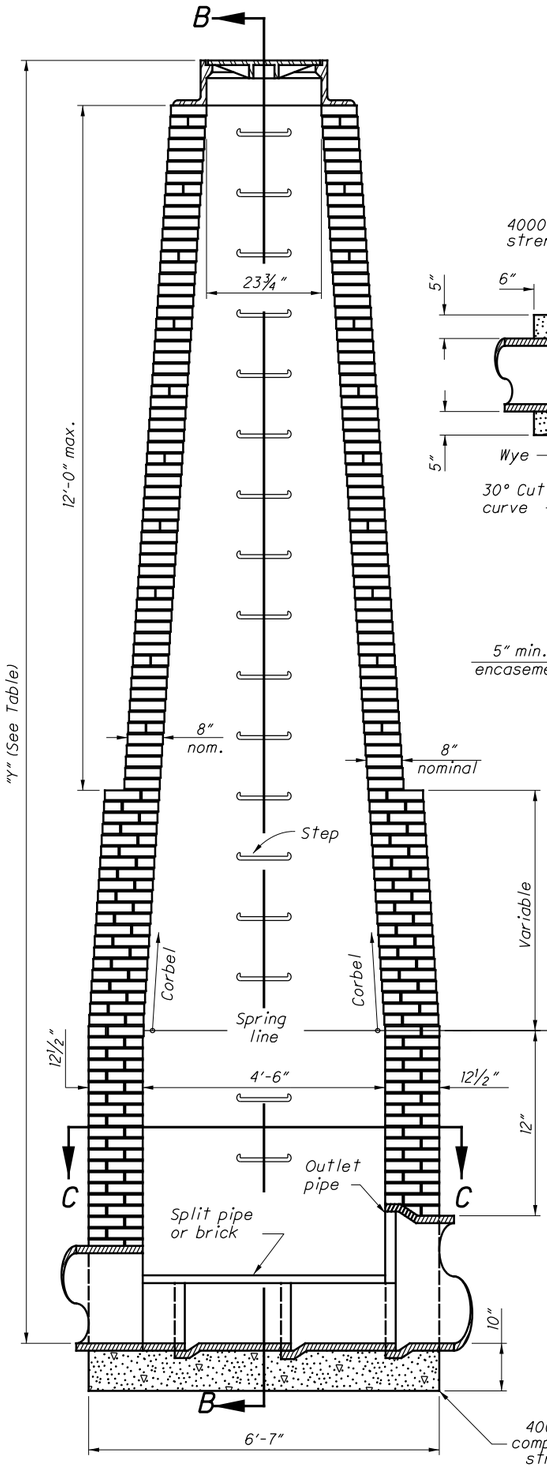

SECTION A-A

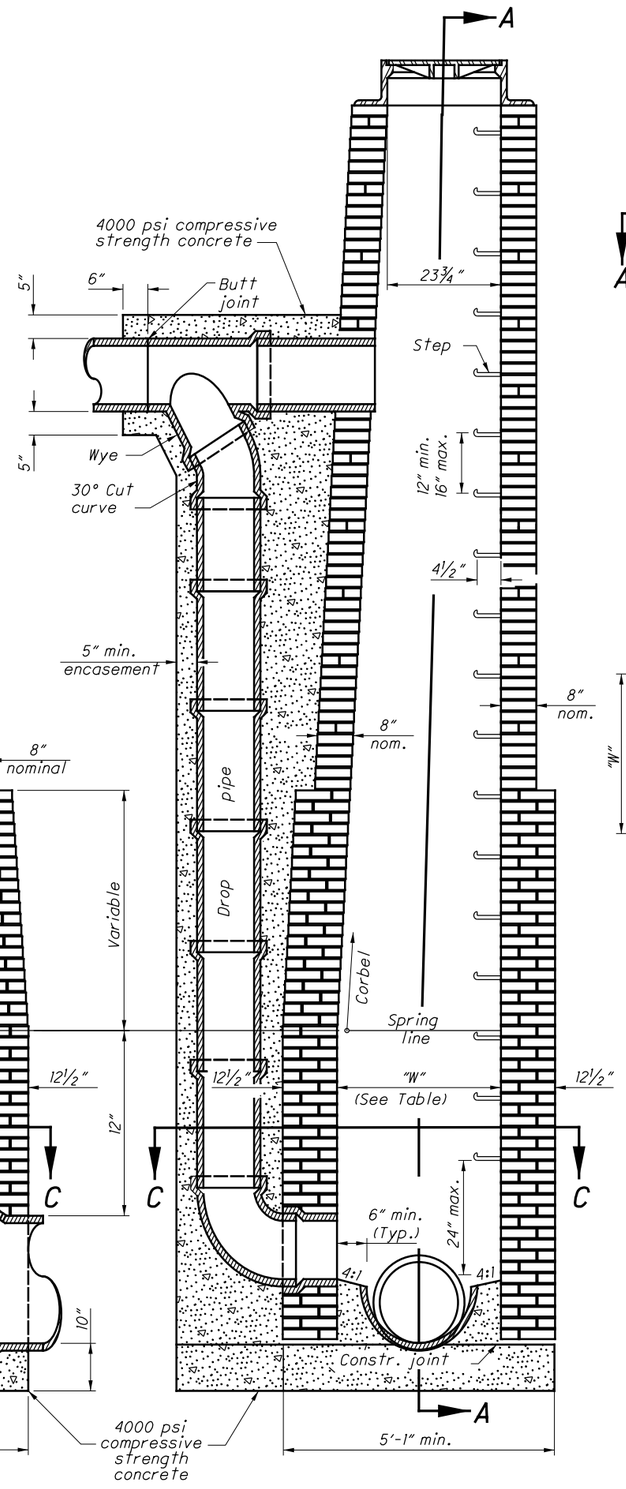

SECTION B-B

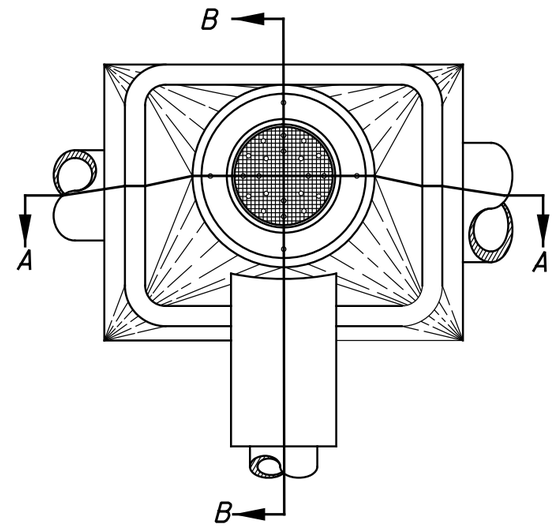

PLAN

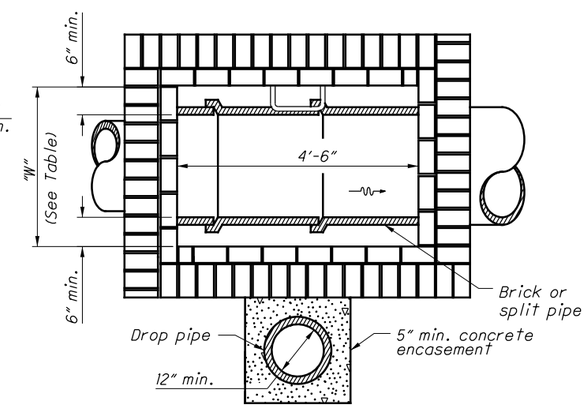

SECTION C-C

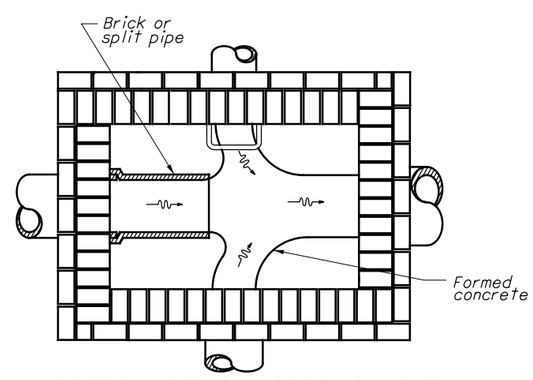

SECTION BELOW SPRING LINE

Showing method of turning side drains which enter the manhole at the flowline.

NOTES

CONSTRUCTION: Build manholes with brick, precast solid concrete blocks or cast-in-place concrete. When manholes are constructed of brick, every sixth course is a stretcher course. Reinforce manholes constructed of 4000 psi compressive strength concrete cast-in-place by placing #5 bars 12" center to center both vertically and horizontally with a 2" clearance from the inside face of the wall. Payment for furnishing and placing reinforcing steel is included in the unit price bid for Item 611.

Construct channel sections in the manhole with split pipe or brick except that curved sections may be built by forming a channel in the concrete.

DROP PIPES: When specified on the plans, construct drop pipes for all conduits carrying sanitary flow which cannot be connected to the manhole within 4', flowline to flowline, as detailed on this drawing.

STEPS, FRAMES AND COVERS: Meet the requirements set forth on **SCD MH-1.1.**

ALTERNATE DESIGN: Precast reinforced concrete manholes detailed on **SCD's MH-1.1, MH-1.3** and **MH-2.1** may be used instead of the design shown, unless otherwise required by the plans.

WALL: Thicknesses are 8" nominal for the top 12' of depth, 12½" for the next 13', 17" for the next 15' and 22½" for the next 15'. Maximum allowable depth is 55'.

Due to the depth requirement above the wall spring line necessary to corbel from dimension "W" to the frame diameter, do not use designs shown unless "Y", measured from flowline to top of cover, is equal to or greater than the minimum depth shown in the following table:

Diameter of outlet pipe.	Width "W" above outlet pipe. (See SECTION B-B)	Min. Depth "Y". Top of cover to flowline. (See SECTION A-A)
12"	3.0'	12.0'
15"		
18"		
21"	3.2'	
24"	3.5'	
27"	3.8'	
30"	4.1'	
33"	4.4'	13.0'
36"	4.7'	14.0'
42"	5.3'	15.5'
48"	5.8'	17.5'
54"	6.4'	19.0'
60"	7.0'	21.0'
66"	7.6'	23.0'
72"	8.2'	24.5'
78"	8.8'	26.0'
84"	9.3'	28.0'
90"	9.9'	30.0'
96"	10.5'	31.5'
102"	11.1'	33.5'
108"	11.7'	35.0'
114"	12.3'	37.0'
120"	12.8'	38.5'

THIS DRAWING REPLACES MH-3.1M DATED 9-6-95.

STATE OF OHIO DEPARTMENT OF TRANSPORTATION HYDRAULIC ENGINEER
Jeffery E. Syar

REVISIONS
7-20-01
7-20-12
1-18-13

ROADWAY HYDRAULIC ENGINEER
M. Cozzoli

OFFICE OF HYDRAULICS ENGINEERING

STANDARD HYDRAULIC CONSTRUCTION DRAWING

MANHOLE No. 2

SCD NUMBER
MH-3.1

1 / 1

I:\ODOTcadd\Standards\ODOT\Sheets\SCD\Hydraulics\MH-3.1_2013-01-18.dgn Sheet 1/27/2017 10:20:32 AM jyoung6