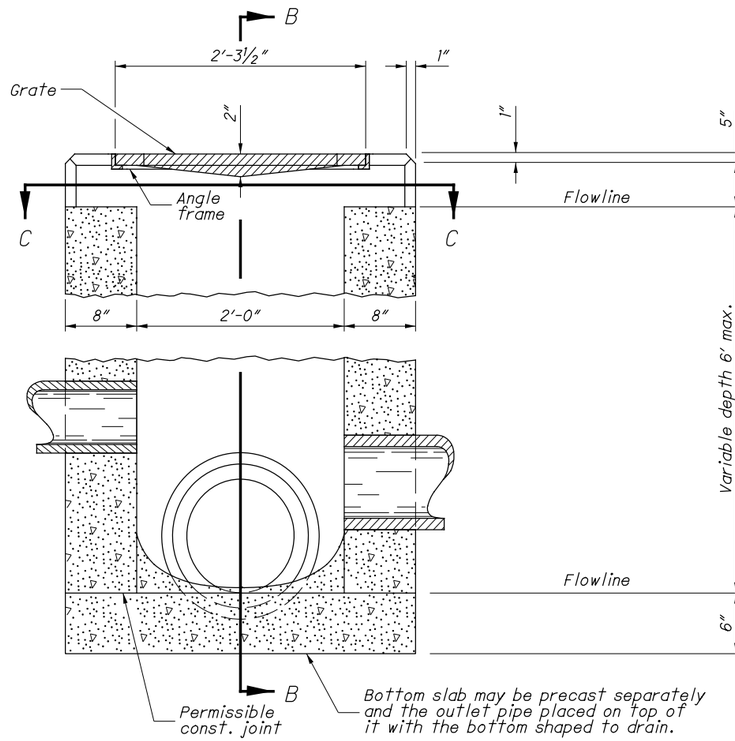

SECTION A-A

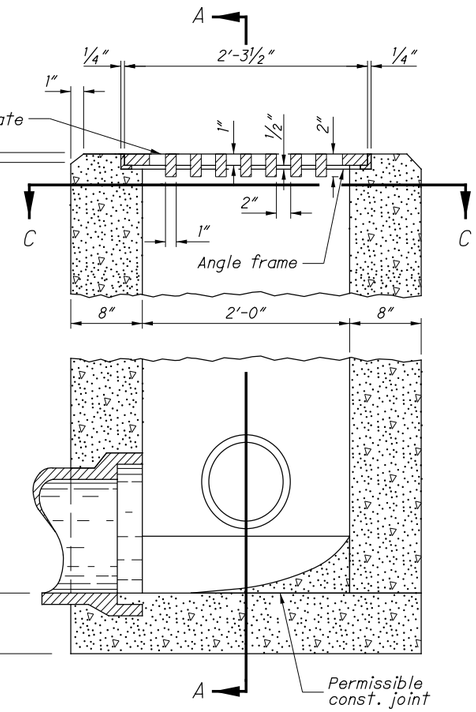

SECTION B-B

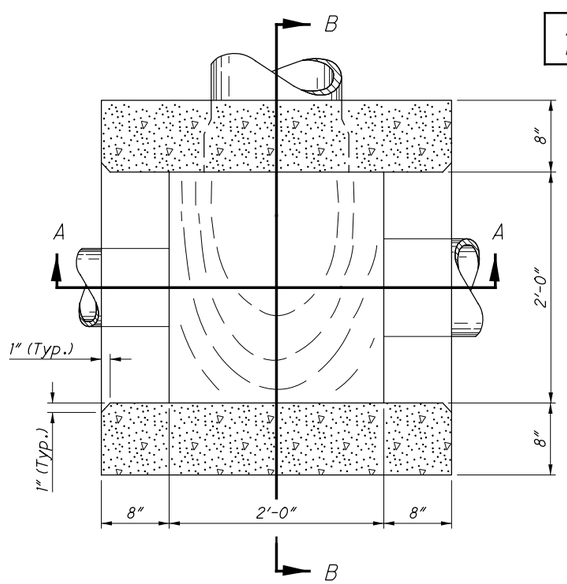

SECTION C-C

All grate edges to be rounded ¼″ radii.

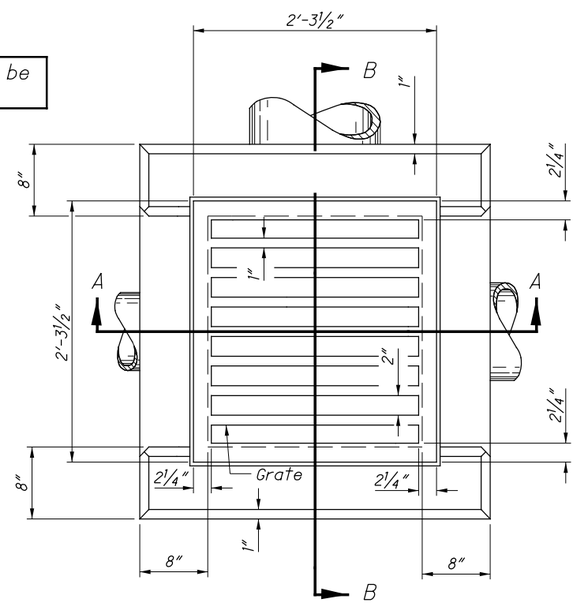

PLAN

CATCH BASIN No. 2-2A

NOTES

GENERAL: Catch Basins 2-2A and 2-2B are not intended for use in roadway applications. Catch Basin 2-2C is intended for parking lot use only.

CATCH BASINS 2-2A, 2-2B & 2-2C: This sheet depicts Catch Basin 2-2A. See Sheet 2 of 2 for Catch Basin 2-2B & 2-2C.

GRATE AND FRAME: Furnish a design essentially the same and equally as strong as the one shown (see Construction Information table), or meet the requirements of CMS 711.14. Provide grate openings and dimensions as shown here unless otherwise shown in the plans.

Cast the following text into the top of the grate:

"DUMP NO WASTE" and **"DRAINS TO WATERWAY"**

Print text in bold, capital letters at least ½″ high. "WATERWAY" may be substituted with "STREAM", "RIVER", "LAKE", etc. Actual placement and logo may vary per manufacturer.

WALLS: Construct brick or cast-in-place walls with a nominal 8″ thickness. Provide precast walls at least 6″ thick with sufficient reinforcing to permit shipping and handling without damage. Do not use brick above the flow line of the side opening for Type 2-2A.

CONCRETE: Use 4000 psi compressive strength for cast-in-place concrete. Meet the requirements of CMS 706.13 for all precast concrete and mark with the catch basin number.

PRECAST BASE: If a precast base is used, set it deep enough so that the top can be placed on the base to provide the grate elevation specified in the plans. Do not use brick layers to adjust the top elevation.

LOCATION AND ELEVATION: When given on the plans, location and elevation are at the top center of the grate.

MINIMUM DEPTH: The minimum depth of CB No. 2-2A is the outside diameter (O.D.) of the outlet pipe plus 7″.

OPENINGS: Ensure pipe openings are the O.D. of the pipe being supplied plus 2″ when fabricated or field cut. Fill any voids per C&MS 611.

2-2A SIDE INLETS: Provide inlets on both sides of the No. 2-2A catch basin in sags and on upstream side only where the ditch has a continuous down grade past the catch basin. Do not use CB 2-2A within the Clear Zone. The flow line should be 4″ to 6″ below normal ditch returning to normal 10′ to 15′ each side of the inlet.

PAYMENT: All materials and labor, including excavation and backfilling, are paid for under **Item 611 - Catch Basin, No. 2-2A.**

CONSTRUCTION INFORMATION
Minimum weight of grate, 120 lbs. Minimum weight of frame, 40 lbs.

CATCH BASIN	OUTLET PIPE SIZE
2-2A, 2-2B, 2-2C	12″ to 21″

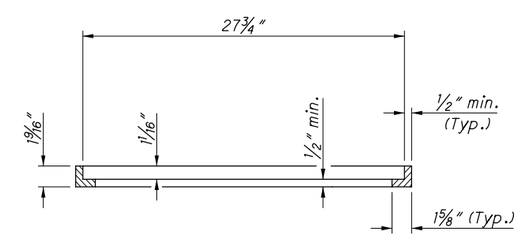

SECTION THRU ANGLE FRAME FOR STANDARD No. 2-2A CATCH BASIN

STATE OF OHIO DEPARTMENT OF TRANSPORTATION HYDRAULIC ENGINEER
Jeffery E. Syar

REVISIONS
7-19-02
7-15-05
7-20-12
1-18-13
1-15-16
7-20-18
7-19-19

ROADWAY HYDRAULIC ENGINEER
M. Cozzoli

OFFICE OF HYDRAULICS ENGINEERING

STANDARD HYDRAULIC CONSTRUCTION DRAWING
CATCH BASINS No's 2-2A, 2-2B & 2-2C

SCD NUMBER
CB-1.1

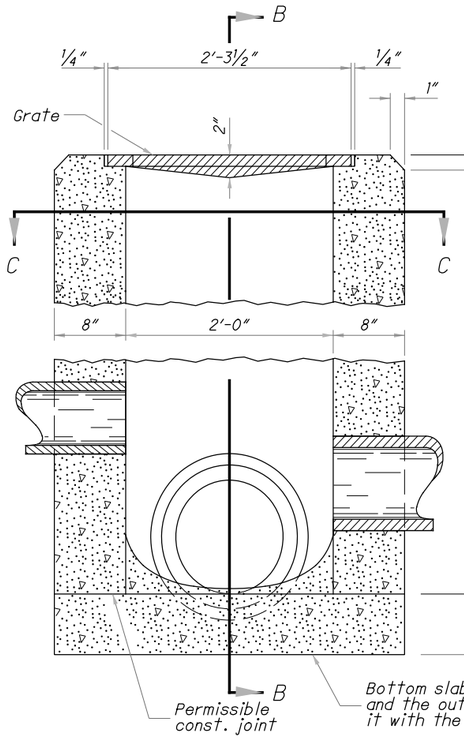

SECTION A-A

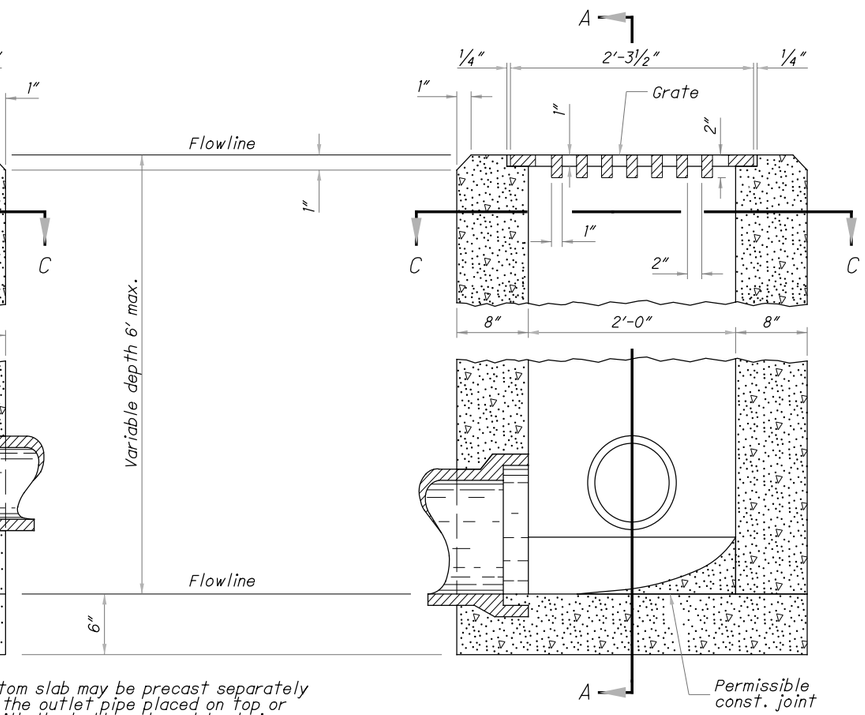

SECTION B-B

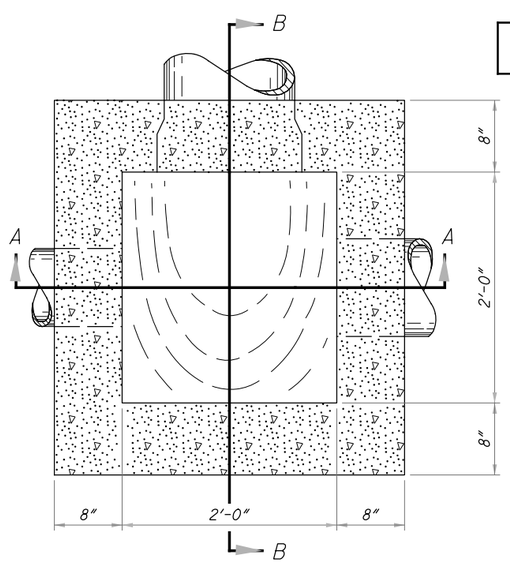

SECTION C-C

All grate edges to be rounded 1/4" radii.

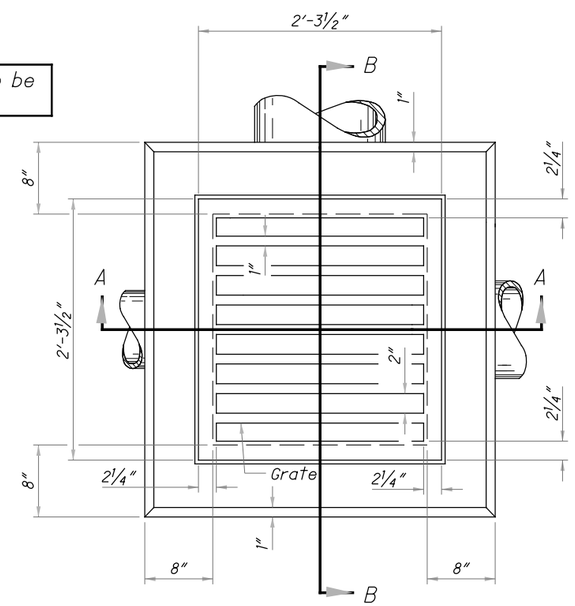

PLAN

CATCH BASIN No. 2-2B

NOTES

CATCH BASINS 2-2A, 2-2B & 2-2C: This sheet depicts Catch Basin 2-2B & 2-2C. See Sheet 1 of 2 for Catch Basin 2-2A.

CB-2-2B GRATE: Furnish a design essentially the same and equally as strong as the one shown (see Construction Information table), or meet the requirements of CMS 711.14. Provide grate openings and dimensions as shown here unless otherwise shown in the plans.

If necessary, bicycle safe grates will be specified in the plans. Furnish Neenah No. R-4859-S or EJ No. 5110M3 (00511043) grates or approved equals.

Place grate elevation 4" to 6" below normal ditch and return to normal 10' to 15' each side of inlet.

CB-2-2C FRAME & GRATE: Where the catch basin is specified for use in a parking lot, Furnish Neenah No. R-1878-A5G or EJ No. V-5622 (45622010) frame and V-5622 (45622030) grate or approved equals. If necessary, bicycle safe grates will be specified in the plans. Furnish Neenah No. R-3405 grate or EJ No. 5250M (00525031) grate or approved equals.

On cast-in-place and precast units, provide a level surface on the catch basin 4" below the plan grate elevation for setting the frame and grate assembly. Provide a concrete apron to encase and secure the frame of a width not less than the thickness of the catch basin walls that the frame was placed on or as shown in the plans. Slope apron to provide local depression.

GRATE TEXT: Cast the following text into the top of the grate:

"DRAINS TO WATERWAY" and **"DUMP NO WASTE"**

Print text in bold, capital letters at least 1/2" high. "WATERWAY" may be substituted with "STREAM", "RIVER", "LAKE", etc. Actual placement and logo may vary per manufacturer.

WALLS: Construct brick or cast-in-place walls with a nominal 8" thickness. Provide precast walls at least 6" thick with sufficient reinforcing to permit shipping and handling without damage.

CONCRETE: Use 4000 psi compressive strength for cast-in-place concrete. Meet the requirements of CMS 706.13 for all precast concrete and mark with the catch basin number.

PRECAST BASE: If a precast base is used, set it deep enough so that the top can be placed on the base to provide the grate elevation specified in the plans. Do not use brick layers to adjust the top elevation.

LOCATION AND ELEVATION: When given on the plans, location and elevation are at the top center of the grate.

MINIMUM DEPTH: The minimum depth of CB No. 2-2B is the outside diameter (O.D.) of the outlet pipe plus 4". The minimum depth of CB No. 2-2C is the outside diameter (O.D.) of the outlet pipe plus 8".

OPENINGS: Ensure pipe openings are the O.D. of the pipe being supplied plus 2" when fabricated or field cut. Fill any voids per C&MS 611.

PAYMENT: All materials and labor, including excavation and backfilling, are paid for under **Item 611 - Catch Basin, No. 2-(2B or 2C).**

CONSTRUCTION INFORMATION
Minimum weight of grate, 120 lbs.

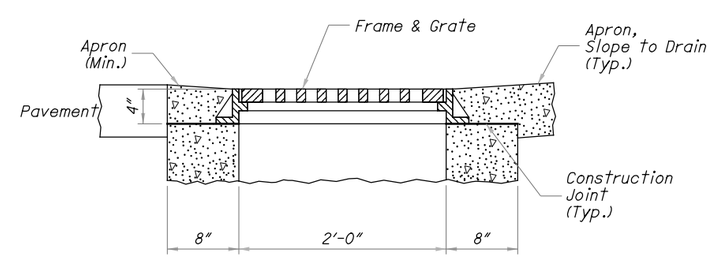

CATCH BASIN No. 2-2C

STATE OF OHIO DEPARTMENT OF TRANSPORTATION HYDRAULIC ENGINEER
Jeffery E. Syar

REVISIONS
7-19-02
7-15-05
7-20-12
1-18-13
1-15-16
7-20-18
7-19-19

ROADWAY HYDRAULIC ENGINEER
M. Cozzoli

OFFICE OF HYDRAULICS ENGINEERING

STANDARD HYDRAULIC CONSTRUCTION DRAWING
CATCH BASINS No's 2-2A, 2-2B & 2-2C

SCD NUMBER
CB-1.1